NEST QUALITY

Union Special®

LEWIS® • COLUMBIA®

INDUSTRIAL SEWING MACHINES

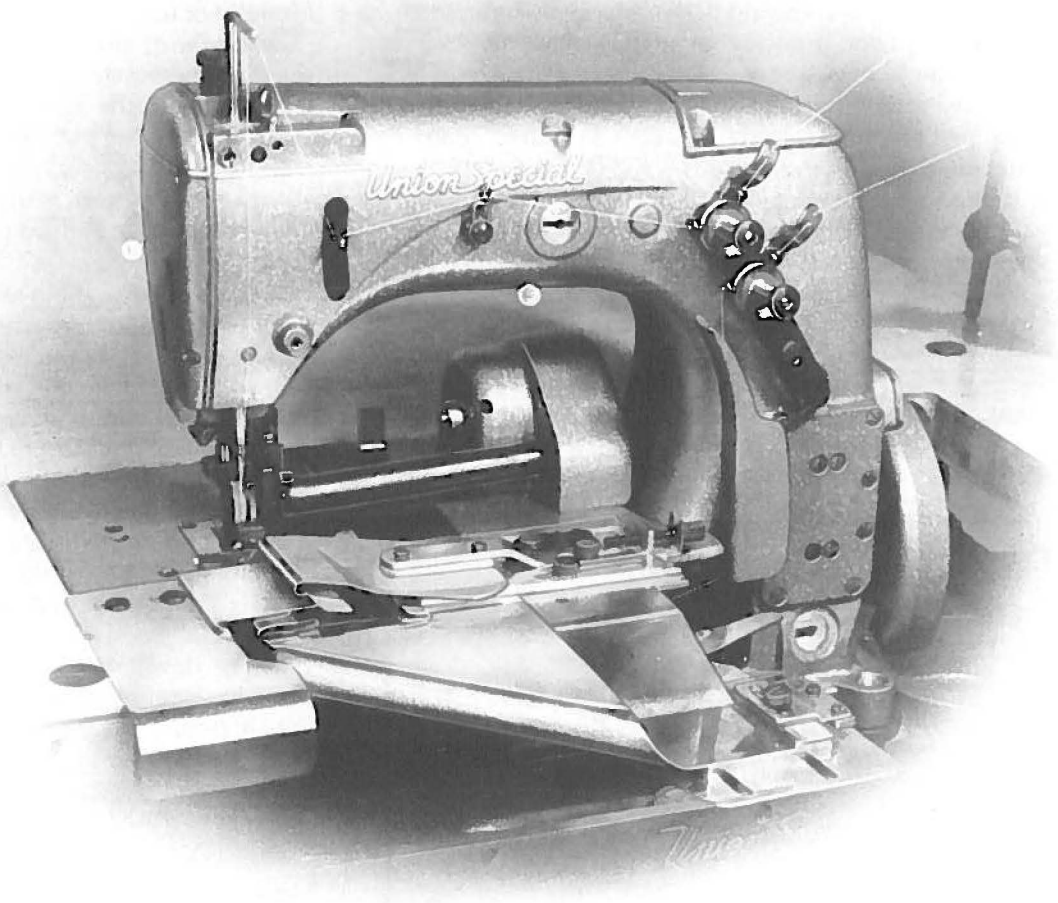

STYLES

53100A
53100B
53100C
53100D
53100E

CATALOG No. 112R

CLASS 53100

STREAMLINED HIGH SPEED ZIG-ZAG MACHINES

UNION SPECIAL CORPORATION

CHICAGO

From the library of: Superior Sewing Machine & Supply LLC

Union Special Wants to Help You Cut Sewing Machine Maintenance Costs

Union Special is offering two practical systems to help pinpoint and reduce your sewing machine maintenance costs: a record keeping system to help spot machines requiring abnormally high maintenance, and a parts inventory system to speed routine repairs.

Machine Maintenance Records

Repair-prone machines or inexperienced operators can eat up your maintenance dollars in short order. To help spot these problems, Union Special suggests two variations of a simple maintenance record keeping system using cards provided by Union Special.

The first system utilizes a "Machine Maintenance Record" card (Form 237) for each sewing machine in a plant. When a repair is required, the card is pulled from the file and the repair date, parts used, and their cost are entered in the spaces provided and the card is refiled.

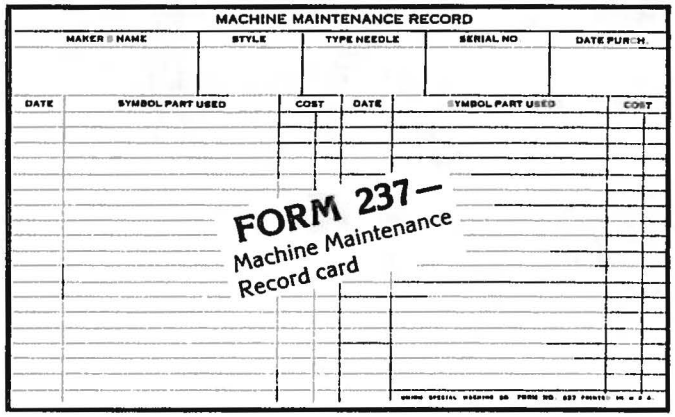

The second system is normally used when more detailed information on repair costs is desired. Two record cards are used: a "Repair Request Card" (Form 234), and a "Machine Repair Record" (Form 233). When a machine requires service, the forelady or foreman fills out the top of a "Repair Request Card" and gives it to a mechanic. He fills in the time the repair work is started, the parts used and their cost, and the completion time. This data is then transferred to the permanent "Machine Repair Record" kept in the office.

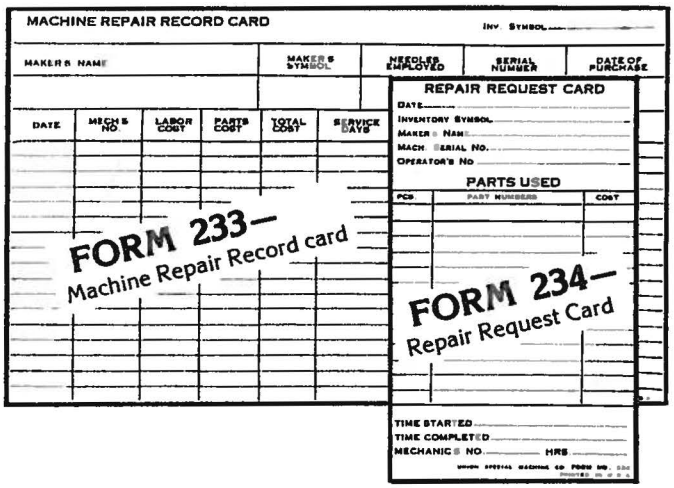

Whichever system is used, management now has an invaluable tool to reduce needless maintenance costs.

Repair Part Inventories

While record keeping tells management which machines require abnormally high maintenance, it does little to help reduce the downtime caused by routine repairs. To alleviate this situation, Union Special recommends that manufacturers establish a formal parts inventory system for each type of sewing machine they operate.

Excessive machine downtime and wasted hours by mechanics can be eliminated with an orderly in-plant inventory of the most commonly needed parts. There is no longer a need to cannibalize other machines for spare parts. Long waits for deliveries are avoided and machine downtime is kept to a minimum. The cost of a parts inventory is small when the overall savings are considered.

Style 39500 QB

Part Number	Description	Minimum Spare Parts Per Machine
39520 A	Presser foot	1
39530	Presser foot hinge spring	2
39597 A	Presser foot stitch tongue marked "DS"	1
39524 B 3/32	Throat plate marked "V-3/32"	1
or	or	
39524 B 1/8	Throat plate marked "V-1/8"	1
22524	Throat plate screw	2
39526 B	Differential feed dog, 16 teeth per inch	1
39505 B	Main feed dog marked B, 16 teeth per inch	1
39505	Chaining feed do[illegible]	1
22528	Screw [illegible]	2
93 A	[illegible]	2
22797 A	[illegible]	2
39570	L[illegible]	4
14077	N[illegible] upper knife clamp stud	1
39549	Lower knife	4
22588 A	Screw for lower knife clamp	1
39508 B	Lower looper	1
39508 A	Upper looper marked "CC"	1
225646	Screw for upper looper	2
39551 F	Needle clamp stud	1
14077	Nut for needle clamp stud	1
22596 E	Screw for needle driving arm	2
21225 1/8	Looper guage	1
154 GAS	Needles (specify size)	100

SAMPLE Spare Parts List

For free sample copies of the machine record cards and spare part inventory lists for a variety of the most popular machines, contact your local Union Special Representative or write direct to Union Special.

From the library of: Superior Sewing Machine & Supply LLC

Catalog No. 112 R

LIST OF PARTS

For Styles

53100 A
53100 B
53100 C
53100 D
53100 E

First Edition

Copyright 1962
By
Union Special Corporation
Rights Reserved in All Countries

UNION SPECIAL CORPORATION
INDUSTRIAL SEWING MACHINES
CHICAGO

Printed in U.S.A.

August, 1978

From the library of: Superior Sewing Machine & Supply LLC

FOREWORD

The 50000 series streamlined zig-zag machines covered by this catalog represent the latest design of the UNION SPECIAL flat bed line. Class 53100 machines offer many advantages on various operations on a variety of garments such as nightgowns, slips, panties, foundations, children's knit undergarments, men's trousers, women's dresses, blouses, bed jackets and pajamas.

Light weight presser bar and needle bar driving mechanism make it possible to attain the utmost in speed and production. The new light weight parts and needle bearings make them lighter running and smoother operating. The light weight presser bar mechanism reduces pressure required to lift the presser foot.

Automatic lubrication and a new filter type oil return pump, used in conjunction with isolated mounting oil pan base plate, for returning filtered oil to the main reservoir, has made maintenance simple.

It is our constant aim to furnish carefully prepared information which will enable our customers to secure all possible advantages from the use of UNION SPECIAL machines. The following pages illustrate and describe the parts used in all of the machines covered in this catalog.

Union Special representatives will be found in all manufacturing centers, ready to cooperate with you to plan and estimate requirements.

UNION SPECIAL CORPORATION

Engineering Department

From the library of: Superior Sewing Machine & Supply LLC

IDENTIFICATION OF MACHINE

Each UNION SPECIAL machine is identified by a Style number which is stamped into the name plate on the machine. Style numbers are classified as standard and special. Standard Style numbers have one or more letters suffixed, but never contain the letter "Z". Example: "Style 53100 A". Special Style numbers contain the letter "Z". When only minor changes are made in a standard machine, a "Z" is suffixed to the standard Style number. Example: "Style 53100 AZ".

Styles of machines similar in construction are grouped under a class number which differs from the style number, in that it contains no letters. Example: "53100".

APPLICATION OF CATALOG

This catalog applies specifically to the standard Styles of machines as listed herein. It can also be applied with discretion to some Special Styles of machines in this class. Reference to direction, such as right, left, front, back, etc., are given from the operator's position while seated at the machine. Operating direction of handwheel is toward the operator.

STYLES OF MACHINE

High Speed Streamlined Flat Bed, Single Needle, Medium Throw, Zig-Zag Machine. Lightweight Presser Bar and Needle Bar Driving Mechanism, Single Reservoir Enclosed Automatic Lubricating System, Filter Type Oil Return Pump and Oil Siphon Assembly. Lateral Looper Travel, Work Space to Right of Needle Bar 7 3/4 Inches.

53100 A For attaching and mitering lace to nightgowns, slips, and panties made from light to medium weight knit and woven fabrics of cotton, rayon, nylon, dacron and similar materials; also for hemming panels on two-way stretch foundations. Can be used for purl edge stitching on children's knit undergarments. Knee press for raising presser foot. Seam specification 404-LSa-1.

53100 B Power driven upper roller feed. For attaching pre-made waistband linings to tops or to waistband of men's trousers, giving hand felled effect. Folder No. 23450 L prepared to take waistbands ranging from 1 1/4 to 4 inches wide, in long lengths, entering from the right, and produces headings of from 1/8 to 3/4 inches. Seam specification 404-LSb-1.

53100 C Same as 53100 B, except without folder.

53100 D Same as 53100 A, except fitted with open toe "V" type presser foot and swing-up edge guide attached to the lower presser bar bushing, to be used for abutted edge seaming on slips and gowns. Seam specification 404-FSa-1.

53100 E Differential feed machine. For attaching lace to neck, armholes and bottom of nightgowns, slips, panties, gathering either the garment, lace or both together. Attaching tiers of lace to slips, dresses and nightgowns. Setting puff sleeves in blouses, bed jackets and pajamas. For operations on light to medium weight knit and woven fabrics of cotton, rayon, nylon, dacron and similar materials where a large percent of the work calls for intermittently or continuously gathered seams. Knee press for raising presser foot. Seam specification 404-LSa-1, FSa-1 or SSa-1.

From the library of: Superior Sewing Machine & Supply LLC

NEEDLES

Each UNION SPECIAL needle has both a type number and a size number. The type number denotes the kind of shank, point, length, groove, finish and other details. The size number, stamped on the needle shank, denotes the largest diameter of blade measured in thousandths of an inch midway between the shank and the eye. Collectively, type number and the size number is the complete symbol.

Standard needle for Styles 53100 A, D and E is Type 163 GAS and the standard needle for Styles 53100 B and C is Type 110 GAS.

Type No.	Description and Sizes
110 GAS	Round shank, round point, extra short double groove, struck groove, ball eye, long spot, government, chromium plated - sizes 090/036, 100/040, 110/044, 125/049.
163 GAS	Round shank, round point, Picoetta, single groove, struck groove, flat blade, long spot, chromium plated - sizes 070/027, 075/029, 080/032, 090/036, 100/040, 110/044, 125/049.

To have needle orders promptly and accurately filled, an empty package, a sample needle, or the type and size number should be forwarded. Use description on label. A complete order would read: "1000 Needles, Type 110 GAS, Size 110/044".

Selection of the proper needle size should be determined by the size of thread used. Thread should pass freely through needle eye in order to produce a good stitch formation.

ORDERING REPAIR PARTS

ILLUSTRATIONS

This catalog has been arranged to simplify ordering repair parts. Exploded views of various sections of the mechanism are shown so that the parts may be seen in their actual position in the machine. On the page opposite the illustration will be found a listing of the parts with their part numbers, descriptions and the number of pieces required in the partcular view being shown.

Numbers in the first column are reference numbers only and merely indicate the position of that part in the illustration. Reference numbers should never be used in ordering parts. Always use the part number listed in the second column.

Component parts of sub-assemblies which can be furnished for repairs are indicated by indenting their descriptions under the description of the main sub-assembly. Example:

9	29476 LE	Looper Driving Lever Crank Assembly	1
10	22559 A	Screw, lower	2
11	51243 C	Ball Stud Guide	1
12	22729	Screw	1
13	22587	Screw, upper	2

It will be noted in the above example that the eccentric and bearing are not listed. The reason is that replacement of these parts individually is not recommended, so the complete sub-assembly should be ordered.

In those cases where a part is common to all of the machines covered by this catalog, no specific usage will be mentioned in the description, however, when the parts for the various machines are not the same, the specific usage will be mentioned in the description, and if necessary, the difference will be shown in the illustration.

From the library of: Superior Sewing Machine & Supply LLC

ORDERING REPAIR PARTS (continued)

At the back of the book will be found a numerical index of all the parts shown in this book. This will facilitate locating the illustration and description when only the part number is known.

IDENTIFYING PARTS

Where the construction permits, each part is stamped with its part number. On some of the smaller parts, and on those where the construction does not permit, an identification letter is stamped in to distinguish the part from similar ones.

Part numbers represent the same part, regardless of catalog in which they appear.

IMPORTANT! ON ALL ORDERS, PLEASE INCLUDE PART NAME AND STYLE OF MACHINE FOR WHICH PART IS ORDERED.

USE GENUINE NEEDLES AND REPAIR PARTS

Success in the operation of these machines can be secured only with genuine UNION SPECIAL Needles and Repair Parts as furnished by the Union Special Corporation, its subsidiaries and authorized distributors. They are designed according to the most approved scientific principles, and are made with the utmost precision. Maximum efficiency and durability are assured.

Genuine needles are packaged with labels marked *Union Special*. Genuine repair parts are stamped with the Union Special trademark, U S Emblem. Each trademark is your guarantee of the highest quality in materials and workmanship.

TERMS

Prices are strictly net cash and are subject to change without notice. All shipments are forwarded f.o.b. shipping point. Parcel Post shipments are insured unless otherwise directed. A charge is made to cover the postage and insurance.

OILING AND THREADING

The oil has been drained from the machine before shipping, and the reservoir must be filled before beginning to operate. Use a straight mineral oil with a Saybolt viscosity of 90 to 125 seconds at 100° Fahrenheit.

Oil is filled at the spring cap in the top cover, and the oil level is checked at the sight gauge on the front of the machine. The oil level should be maintained between the red lines on the gauge. The capacity of the oil reservoir is 12 ounces.

The machine is automatically lubricated, and no oiling, other than keeping the main reservoir filled is necessary.

A daily check before the morning start should be made and oil added if required. Oil which has gone through the machine is filtered and pumped back into the main reservoir, making too frequent oilings unnecessary. Excessive oil in the main reservoir may be drained at the plug screw in the main frame directly under the handwheel.

On the next page is a picture showing the manner in which the 53100 Styles covered in this catalog are threaded. The looper threading has been enlarged for clarity.

From the library of: Superior Sewing Machine & Supply LLC

OILING AND THREADING DIAGRAM

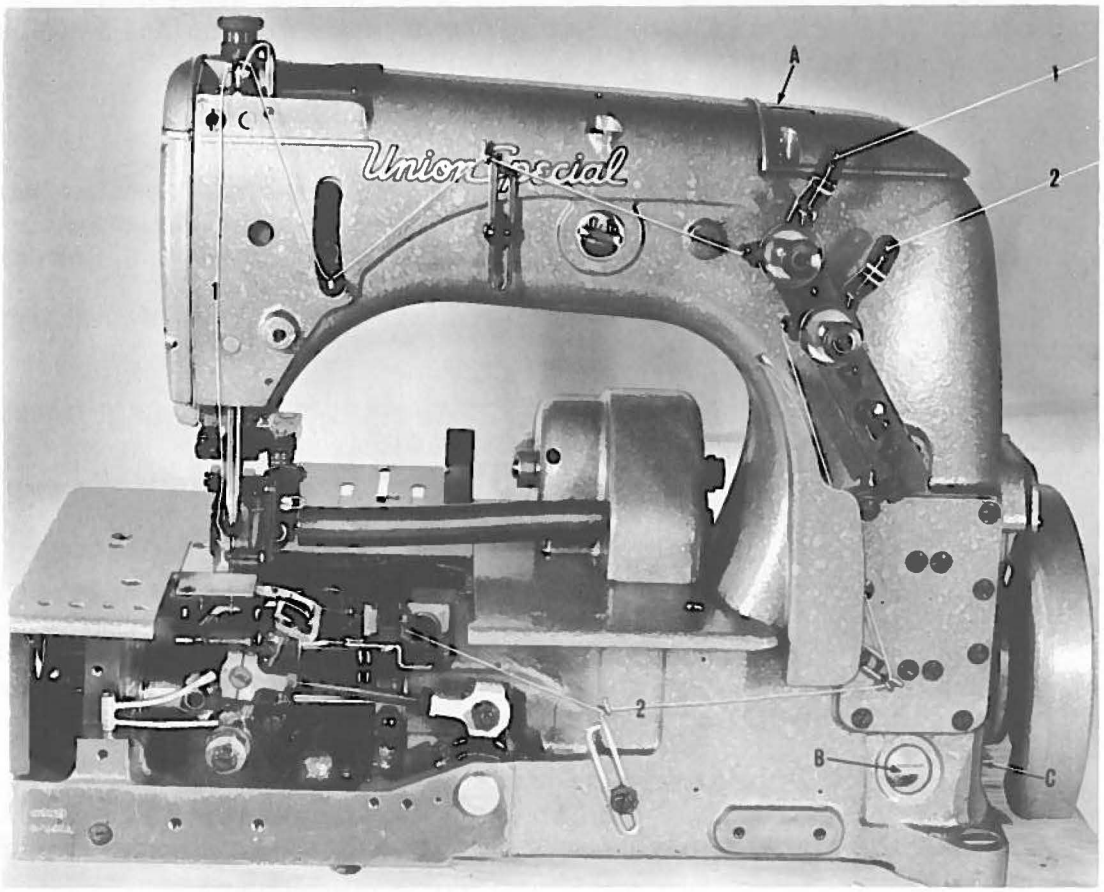

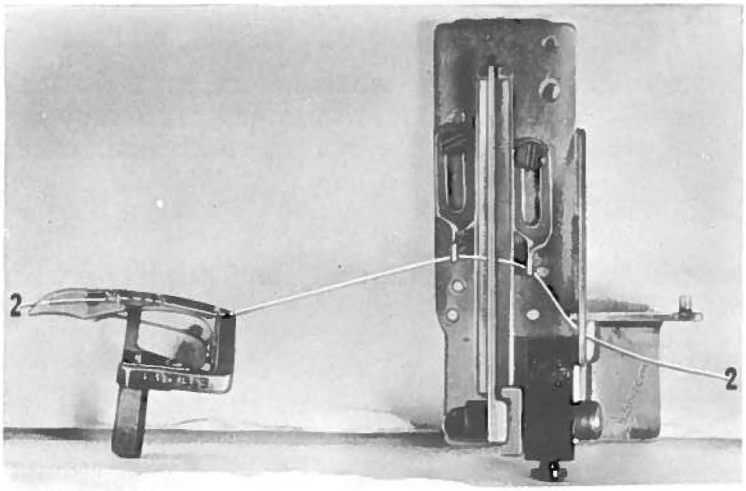

STYLE 53100 C

Oil has been drained from the machine before shipping, and the reservoir must be filled before beginning to operate. Oil is filled at spring cap (A). Oil level is checked at sight gauge (B). Use a straight mineral oil with a Saybolt viscosity of 90 to 125 seconds at 100° Fahrenheit. Excessive oil in the main reservoir may be drained at plug screw (C).

Thread machine as indicated, thread 1 is the needle thread, and thread 2 is the looper thread. The looper threading at the cast-off plate and looper has been enlarged for clarity.

From the library of: Superior Sewing Machine & Supply LLC

SELF-PRIMING HEAD OIL SIPHON

Class 53100 machines are equipped with a self-priming head oil siphon. When the machine is started, oil splashes on the priming cup felts, filters through the felts, and trickles down the vertical oil tube, thus, priming the siphon. Once the prime is established, it is maintained, unless the felts are removed. The siphon operates twenty-four hours a day, removing oil at the rate of six to twelve drops per minute, which of course, far exceeds the rate at which oil collects in the head.

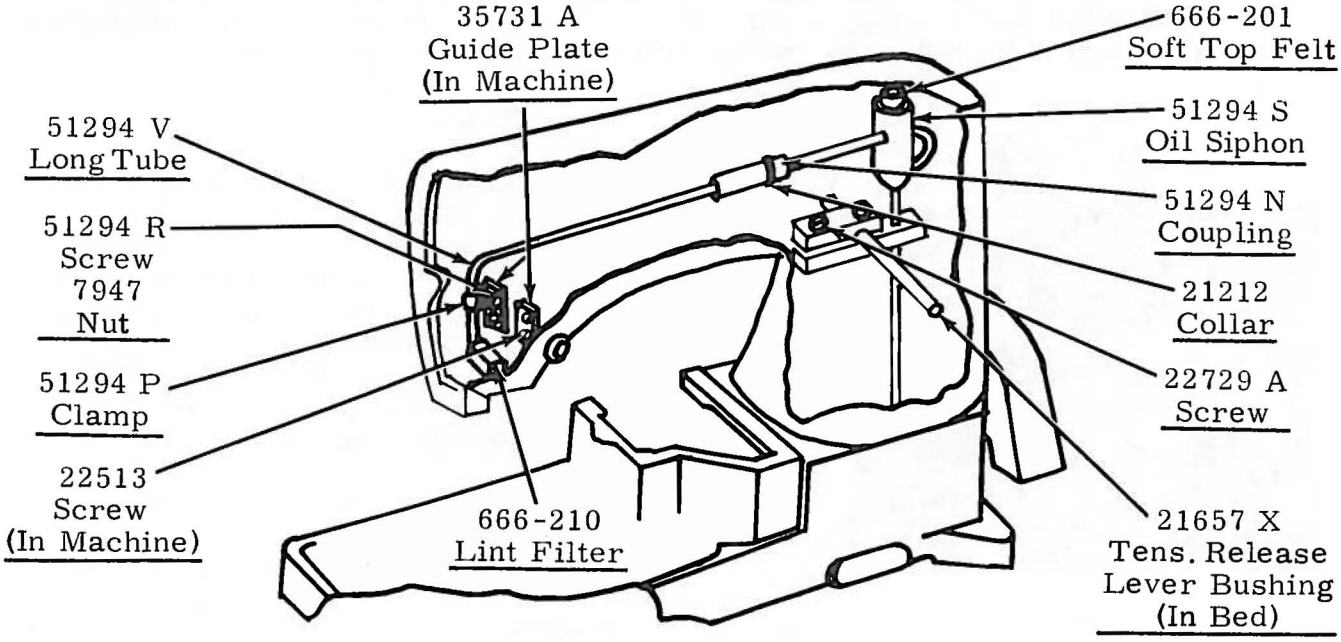

INSTALLING AND MAINTENANCE OF OIL SIPHON

A newly installed siphon starts its action within three to five minutes after the machine is operating. However, it may be twenty minutes or so before all the air is removed from the line and the siphon is in full operation. In Class 53100 machines without a head sump, the head will be free of excess oil by that time.

The felts in the priming cup are designed for a specific purpose. The bottom felt, 666-209, is thin and relatively dense, to meter the flow of priming oil and to prevent the entrance of air. The softer top felt, 666-201, is a filter to prevent the clogging of the metering felt. This felt, at the intake of the siphon, keeps the siphon clear of lint, and prevents the entrance of air at that point. For the best initial self-priming condition, the felts of the siphon should be dry. In this condition, it is difficult for air to be trapped between the felts or in the top soft felt itself.

However, if for some reason the priming cup felts had been oiled before installing, the siphon may fail because air is trapped between the felts or in the soft top felt. As a precaution, remove the soft felt from the cup. Then, while squeezing the felt between the fingers, saturate it well with oil. In other words, squeeze out the air and replace it with oil. Then, completely fill the cup with oil and push or twist the soft felt down into cup so that it definitely contacts the harder thin felt. This precaution prevents the trapping of air, and no trouble should be experienced when starting the siphon.

If you want to be doubly sure that the siphon is functioning correctly, on a machine in operation, apply a certain amount of oil in the sump around the felt in the head. Before doing this, be certain that this felt has been saturated in the same manner as explained for the soft felt in the top of the siphon cup. When this is done, the siphoning action will begin, and the oil will be removed as explained.

From the library of: Superior Sewing Machine & Supply LLC

NEEDLE LEVER STUD SETTING

Observe the location of the needle lever stud (A, Fig. 1). The head of the needle lever stud is marked with an arrow and the word "UP". These studs are set correctly when the arrow points vertically up. Also check the position of the needle lever bearing oiler (B) inside the arm casting, which lubricates the needle lever stud. Make sure it is tilted downwardly and that its delivery end (C) contacts the inside wall of the bed casting at the back, just above the notch of the needle lever shaft stop collar. Do not allow the oil tube to rest on the needle lever.

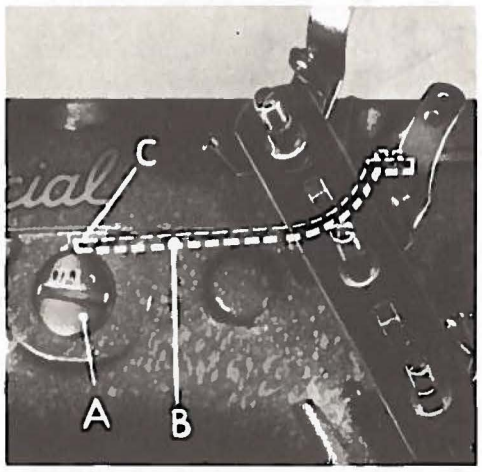

Fig. 1

OILING SYSTEM

Clean machine thoroughly. Fill oiling system to the first red line of oil gauge on the front of the machine, and oil all bearings. Run machine slowly for a minute to allow oil wicks to carry oil to the bearings. Then, recheck oil in oiling system and run machine for five minutes. Run Styles 53100 A, D, and E at 4500 R.P.M. and Styles 53100 B and C at 4000 R.P.M. Inspect siphon and head felt for proper function, and all plug screws for leakage.

SETTING THE ZIG-ZAG MOTION

Set the zig-zag motion to the maximum travel that the needle hole in the throat plate will permit. This can be accomplished by moving the ball joint (A, Fig. 2) in the segment lever (B) located under the cover directly above the handwheel on the right side of machine. Moving it away from the operator increases the zig-zag motion and toward the operator acts the reverse.

The cam gear pinion, located on the crank shaft adjacent to the handwheel housing, should be set so that the lateral zig-zag motion of the needle bar occurs when the needle is completely out of the work. This is accomplished by loosening the set screws in the pinion; then, while holding the gear train in a fixed position, turning the handwheel either forward or backward until the desired timing is obtained.

SPACING NEEDLE IN THROAT PLATE

Equalize the clearance between the needle (A, Fig. 3) and the right and left sides of the needle hole (B) in throat plate (C). This is accomplished by loosening set screw (D) and turning the eccentric stud (E) clockwise or counterclockwise until the described clearance has been obtained. Retighten set screw.

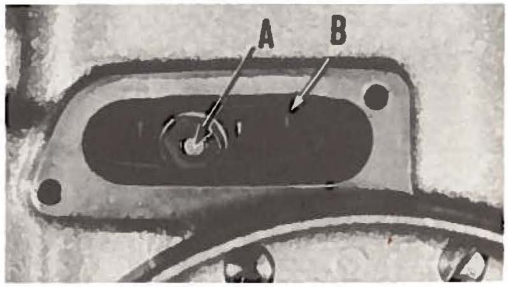

Fig. 2

If additional adjustment is required, it can be obtained by loosening set screw (A, Fig. 4) and turning the eccentric ball joint stud (B), located at the right end of the needle bar frame under the top cover, either clockwise or counterclockwise.

SETTING THE LOOPER

Insert a new needle, size as specified, Type 163 GA for Styles 53100 A, D, E and Type 110 GA for Styles 53100 B and C.

From the library of: Superior Sewing Machine & Supply LLC

SETTING THE LOOPER (continued)

With the zig-zag motion at the end of its stroke to the right, set the looper (A, Fig. 5) so the distance from the center of the needle (B) to the point of the looper is 5/32 inch, when the looper is at its farthest position to the right. Looper gauge No. 21225-5/32 (C) can be used advantageously in making this adjustment. If adjustment is needed, loosen nut (D) (it has a left hand thread) and also loosen nut on right end of connecting rod (E), turn connecting rod forward or backward to obtain 5/32 inch and retighten both nuts.

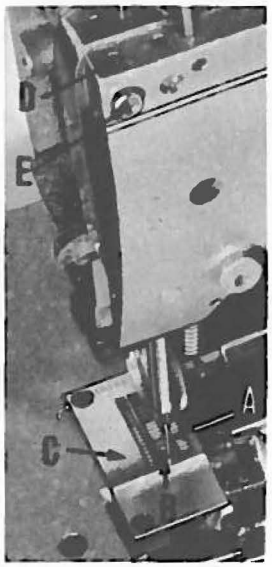

Fig. 3

The looper is set correctly in line with the feed when there is .003 inch space between its point (A, Fig. 6) and the rear of the needle (B) as the former is ascending on the right side. If adjustment is needed, loosen screw (F, Fig. 5) and move looper toward or away from needle as required and retighten screw when .003 inch space is obtained.

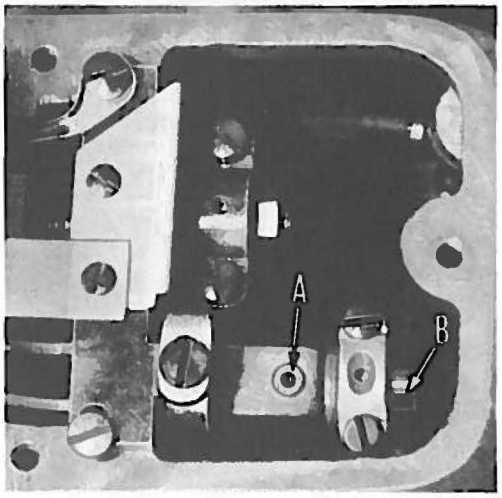

Fig. 4

SETTING HEIGHT OF NEEDLE BAR

The height of the needle (A, Fig. 7) is correct when the top of its eye is 1/64 inch below the underside of the looper, with the looper point flush with the left side of the needle and the needle is ascending on the left side. If adjustment is necessary, loosen screws (B) and move needle bar (C) up or down as required and retighten screws.

SYNCHRONIZING LOOPER AND NEEDLE MOTIONS

Turn the handwheel in the operating direction until the looper point (A, Fig. 8) moves to the left and is even with the left side of the needle (B). Note the height of the eye of the needle with respect to the looper point, then, turn the handwheel in the reverse direction until the looper point again moves to the left, and is even with the left side of the needle. If the motions synchronize, the height of the eye of the needle with respect to the looper point will be the same. A variation of .005 inch is allowable. If the distance from the eye of the needle to the point of the looper is longest when the pulley is turned in the operating direction, move the looper drive lever shaft synchronizing stud (C) to the rear. Moving it in the opposite direction acts the reverse.

Moving of the looper drive lever shaft synchronizing stud is accomplished as follows: Loosen clamp screw (D) of looper drive lever.

To move stud to rear (away from operator), a light tap with a small hammer, directly on the stud, is all that is required.

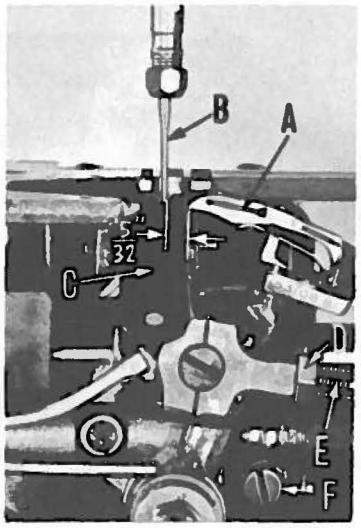

Fig. 5

From the library of: Superior Sewing Machine & Supply LLC

SYNCHRONIZING LOOPER AND NEEDLE MOTIONS (continued)

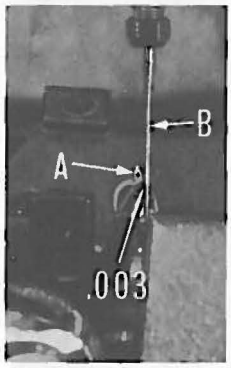

Fig. 6

To move stud forward (toward operator), remove the cloth plate, oil reservoir top cover, oil reservoir back cover, and on Styles 53100 B and C, remove the clutch drive housing; then, a light tap on the looper drive lever rocker shaft, toward the operator, is all that is required.

Then, using the looper drive lever to take up the end play between the looper drive lever rocker shaft and its synchronizing stud, tighten the looper drive lever on the shaft using screw (D, Fig. 8).

Reset the zig-zag motion to maximum that the needle hole in throat plate will permit (allow .010 to .015 inch clearance between the side of needle and needle hole).

SETTING THE FEED DOG

For Styles 53100 A, B, C and D, set the feed dog (A, Fig. 9) in the throat plate (B) so there is equal clearance on all sides. See that the tips of the teeth are parallel with and 3/64 inch above the throat plate at high point of travel. Adjust the supporting screw (C), under the feed dog, to maintain this setting. Screw (D) is used to hold feed dog in position.

If feed dog teeth are not parallel with the throat plate, loosen nut (A, Fig. 10) and turn screw (B) clockwise to lower the front teeth, and counterclockwise to raise the front teeth. Retighten nut when feed dog is set properly.

Should it be necessary to move the feed dog to the left or right, loosen screws (A, Fig. 11) which hold the feed rocker (B) onto the feed rocker shaft (C), and move feed rocker to desired position and retighten screws. Make sure that the feed rocker arm (D) does not bind after making this adjustment.

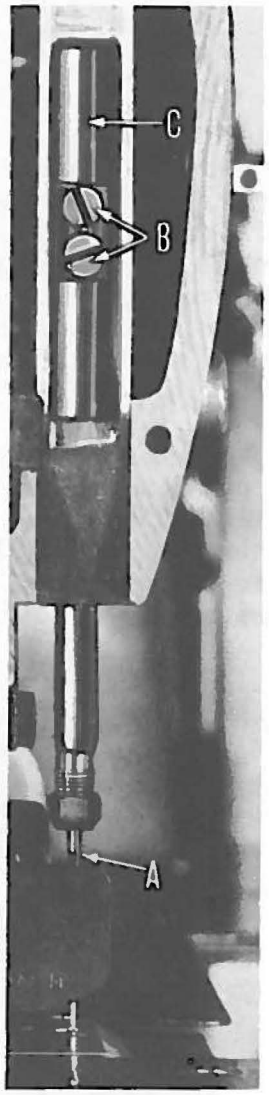

Fig. 7

Should it be necessary to move the feed dog forward or backward, loosen screws (E) which clamp the feed rocker arm to the feed rocker and move the feed rocker forward or backward as needed, and retighten screws.

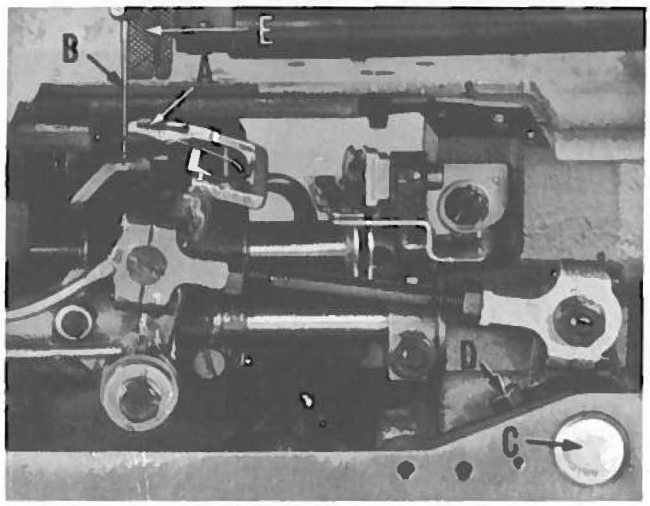

Fig. 8

For Style 53100 E, set the main feed dog so that it is level with the throat plate, and that at its high position, it extends the depth of a tooth above the throat plate. Maintain this adjustment by means of the stop screw under the feed dog holder.

Space the feed dog laterally, so that there is equal clearance between the feed prongs and the throat plate slots. Loosen feed dog holding screws and move feed dog from side to side for this adjustment. If more adjustment is needed, the feed dog may be moved laterally the same as described in paragraph 3.

From the library of: Superior Sewing Machine & Supply LLC

With an average stitch length setting, equalize the travel of the feed dog so that, at both ends of its travel, it is equidistant from the ends of the throat plate slot. Make this adjustment the same as described in paragraph 4.

Set the height of the differential feed dog to correspond with that of the main feed dog by moving it up or down in its holder.

Turn handwheel in operating direction until the feed dog is at its farthest point of travel to the rear, and set the differential feed so that there is 1/64 inch clearance between the center row of teeth and the end of the throat plate slot. This is done by loosening the two headless screws which clamp the shank of the differential feed bar. The throat plate support will have to be removed for access. Also level the feed during this adjustment.

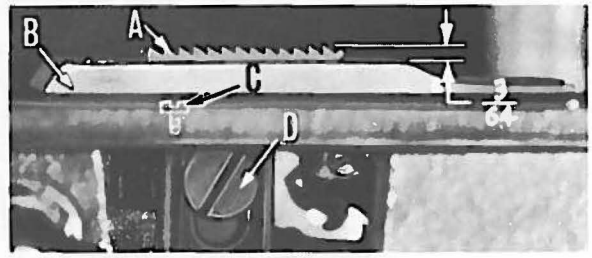

Fig. 9

Set the front stop for the intermittent differential feed lever as far forward in its slot as it will go. Turn the handwheel in operating direction until the feed dogs are descending. When the tips of their teeth are flush with the top of the throat plate, manipulate the differential feed control lever up and down. At this point, there should be no more than 1/64 inch motion in the differential feed dog. If more motion exists, loosen the three screws which hold the segment slot plate to the feed rocker, and manipulate the position of the slot plate until excess motion of the differential feed dog is eliminated. An offset screw driver will be required for this adjustment.

Continue to turn the handwheel in operating direction until the feed dog reaches its most forward point of travel. Depress the differential feed control lever until the front of the differential feed dog just clears the throat plate slot by 1/64 inch and set the rear stop for the differential feed control lever against the lever pointer at this position.

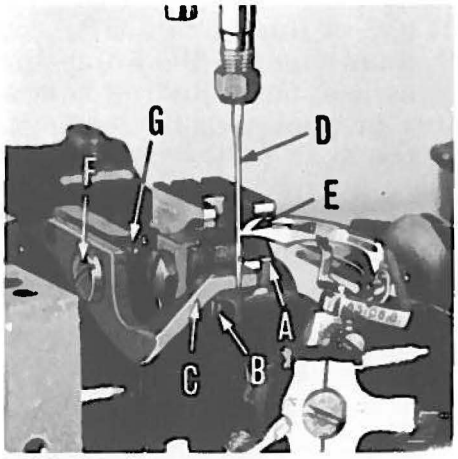

Fig. 10

CHANGING STITCH LENGTH

Set the stitch to required length. This is accomplished by loosening the lock nut (F, Fig. 11) (it has a left hand thread) on the end of the stitch regulating stud and turning the stitch adjusting screw (G) located under the left end of the cloth plate, in the head of the main shaft (H). Turning screw in a clockwise direction shortens the stitch, and turning screw in a counterclockwise direction lengthens the stitch.

SETTING THE NEEDLE GUARD

Set the needle guard (C, Fig. 10) horizontally so that it barely contacts the needle (D). It should be set as low as possible, yet have its vertical face remain in contact with the needle until the point of the looper (E), moving to the left, is even with the needle and the latter is ascending on the left side. To move needle guard forward or backward, merely loosen screw (F), move needle guard as required, and retighten screw. To raise or lower needle guard, loosen screw (F), and turn screw (G) clockwise to lower needle guard, and counterclockwise to raise needle guard. Retighten screw (F) after guard is set properly.

NOTE: Any change in stitch length will require a change in the needle guard setting.

From the library of: Superior Sewing Machine & Supply LLC

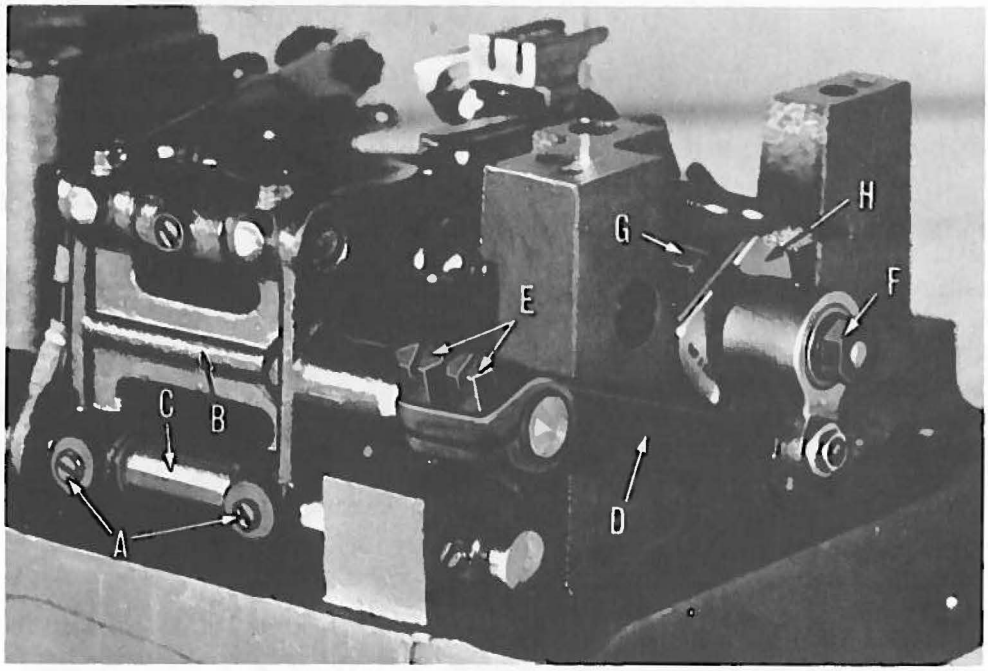

Fig. 11

SYNCHRONIZATION OF THE UPPER ROLLER FEED

On Styles 53100 B and C, synchronize the upper roller feed (E, Fig. 8) with the lower feed dog. This is accomplished by removing the plug screw (A, Fig. 12) from the top of the housing (B) located at the rear right side of the machine. Then, after noting the direction the shaft journaled in the housing rotates, loosen the clamp screws in the gear hub, made accessible by removal of the plug screw. Turning this back shaft in its operating direction causes the top roller feed to start turning sooner, and turning the shaft backward causes the puller roll to start turning later.

The travel of the top roller feed is adjusted at the left end of this back shaft. Its adjustment is identical to the stitch length adjustment mentioned in the adjusting instructions under "CHANGING STITCH LENGTH". It has the same adjusting screw and left hand thread lock nut arrangement. When loosening or tightening the lock nut, do not hold the handwheel to maintain shaft position, as the gear on the crankshaft might shift, which would make it necessary to re-time the machine. Instead, insert a screw driver through the access hole (C) in the top of the gear housing at the left end and engage the adjusting screw. By holding the screwdriver in this manner, the lock nut may be loosened or tightened without disturbing the gear setting.

NOTE: The adjustment just mentioned and the regulation of the pressure on the presser foot are very important to the appearance of the finished seam.

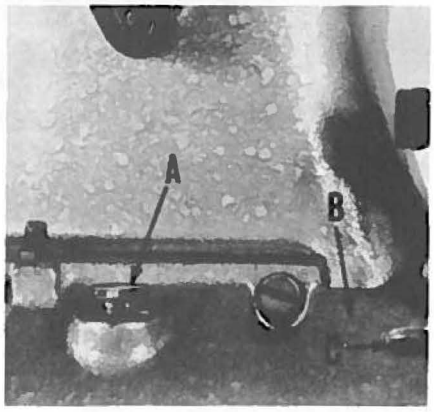

Fig. 12

THREADING

Draw looper and needle threads into the machine and start operating on a piece of fabric. Refer to threading diagram on Page 8 , for manner of threading these machines.

From the library of: Superior Sewing Machine & Supply LLC

SETTING THE LOOPER THREAD TAKE-UP

The cast-off plate (A, Fig. 13) should be set over the take-up so that there is equal clearance on each side. The looper thread take-up (B) is not spotted on the main shaft, and consequently, can be set to compensate for varying conditions. It is set correctly, when the looper thread is just cast off the highest lobe of the take-up when the point of the needle (C) is clearly visible below the underside of the looper (D). The looper thread eyelets (E), located on the cast-off plate, are adjustable, and their setting determines the amount of thread pulled off by the take-up. Moving the eyelets to the rear causes more thread to be pulled from the cones, and moving them forward causes less thread to be pulled off. Set the eyelets so that, when the looper reaches its extreme position to the left, all the slack has been removed from the looper thread, but it has not become taut. The retaining finger (F) controls the amount of slack thread in the system, and it is set correctly when it prevents the looper thread triangle from being wiped under the blade of the looper when the looper moves from right to left.

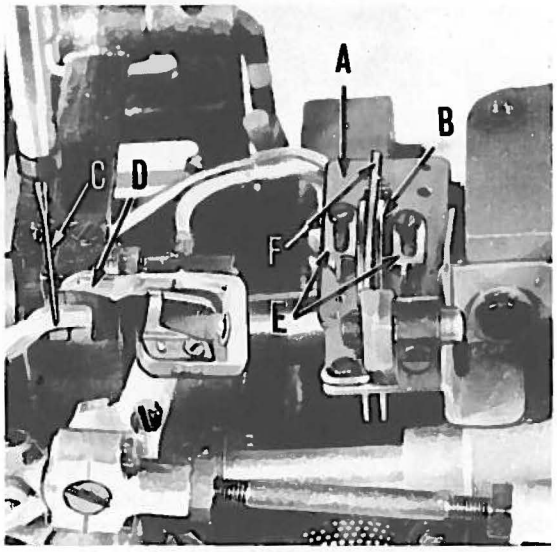

Fig. 13

THREAD TENSIONS

The tension on the needle thread should be only sufficient to produce uniform stitches on the under surface of the fabric. The tension on the looper thread should be just sufficient to steady the thread.

PRESSER FOOT PRESSURE

Regulate the presser spring regulating screw (A, Fig. 14) so that it exerts only enough pressure on the presser foot to feed the work uniformly. This is located directly behind the needle bar in the head of the machine. Also, regulate the pressure on the upper roller feed, using only enough pressure to insure the uniform feeding of the material being sewn.

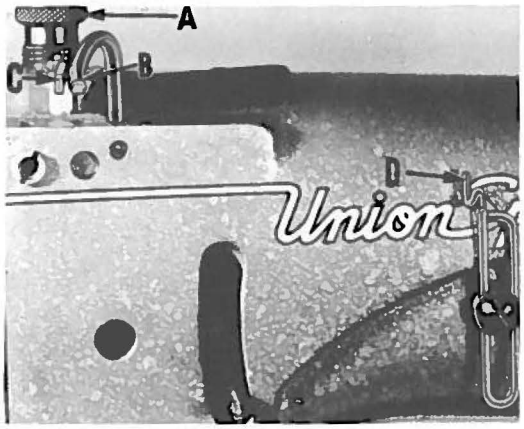

Fig. 14

SETTING NEEDLE THREAD TAKE-UP

Set the needle thread take-up (B, Fig. 14), located adjacent to the needle bar thread eyelet (C), so that its upper surface projects 3/32 inch above the line of thread when the needle bar has completed its downward stroke. Set the needle thread frame eyelet (D) so the smallest noticeable amount of thread is drawn through the needle thread tension while the needle is descending. (Setting this eyelet too high can cause the needle thread around the looper to be pulled from under the front retainer prematurely).

From the library of: Superior Sewing Machine & Supply LLC

SETTING SPRING RETAINERS ON LOOPER

The spring retainers (A, Fig. 15) on the looper (B) are set correctly when they exert only enough pressure on the needle thread, around the looper, to retard this thread long enough for the descending needle to reach a point where the thread released by these retainers cannot fly or be pulled to the left of the needle.

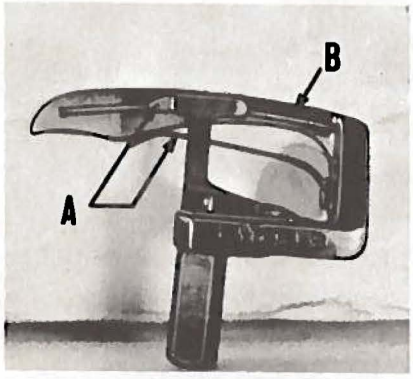

Fig. 15

THREAD TENSION RELEASE

The thread tension release is set correctly when it begins to function as the presser foot is raised to within 1/8 inch of the end of its travel and is entirely released when the presser foot reaches its highest position. On Styles 53100 B and C, adjust feed roller lifter connection so that, when the presser foot and the feed roller are raised, the feed roller does not contact the presser foot.

SETTING THE ATTACHMENTS

On Styles 53100 B and C, set the folder as close to the presser foot as possible and still allow free passage of the body and waistband material. Adjust it laterally so that there is 3/16 inch margin on the under ply of the canvas to the left of needle. Set the upper folder so that the needle penetration is 1/32 inch from the top edge of the canvas. Set the body guide so that there is a margin of 1/4 inch to the right of needle. Adjust the canvas guide to conform to the width of the canvas. The folder is adjustable to take waistbands from 1 3/4 to 4 inches wide. To adapt folder for the extreme narrow width, remove the right hand attaching screw for the canvas guide and for the extreme wide width, remove the left attaching screw.

Styles 53100 D and E are equipped with a swing-out edge guide for abutted edge seaming. The edge guide should be set down snugly against the stitch tongue in the throat plate. There is an in and out adjustment screw and lock nut for increasing or decreasing the space between the two abutted edges.

Style 53100 E is equipped with an auxiliary pressure plate to produce gathering or ruffling. If set on the right side of and against the swing-out edge guide, the right ply will be ruffled. If set on the left side of and against the swing-out edge guide, the left ply will be ruffled. The pressure plate should be set so that the distance from its edge to the front edge of the throat plate is 19/32 inch.

From the library of: Superior Sewing Machine & Supply LLC

EXPLODED VIEWS

AND

DESCRIPTION OF PARTS

FOR

CLASS 53100 ZIG-ZAG MACHINES

From the library of: Superior Sewing Machine & Supply LLC

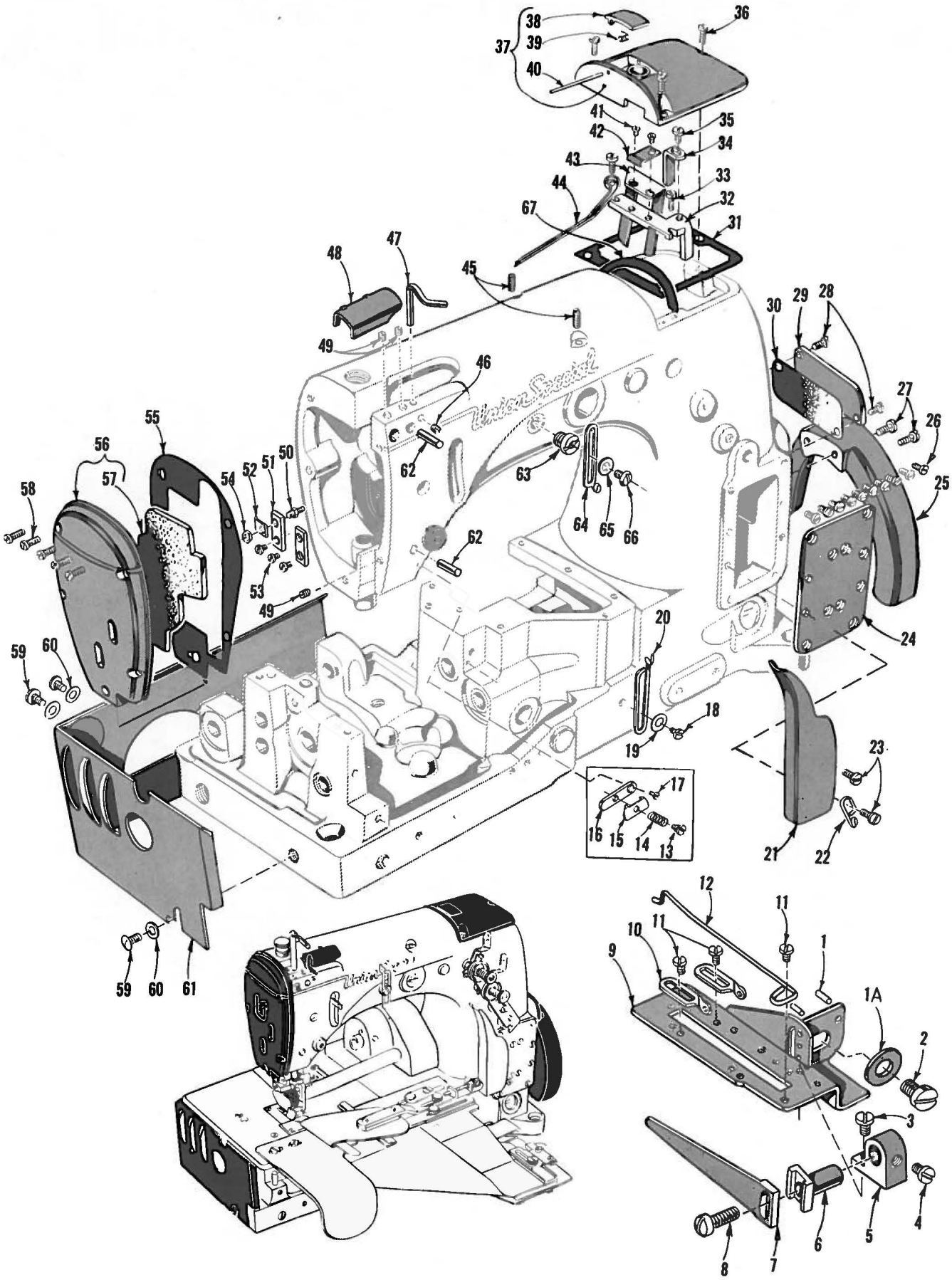

From the library of: Superior Sewing Machine & Supply LLC

MAIN FRAME, CAST-OFF PLATE, MISCELLANEOUS COVERS AND PLATES

Ref. No.	Part No.	Description	Amt. Req.
1	50-216 Blk.	Dowel Pin	2
1A	21657 E	Washer	1
2	22528	Screw	1
3	22768	Screw	1
4	87 U	Screw	1
5	52904 E	Retaining Finger Support Bracket	1
6	52804 E	Retaining Finger Support	1
7	52904 B	Retaining Finger	1
8	22516	Screw	1
9	52957 C	Cast-Off Support Plate	1
10	52958 D	Eyelet	2
11	73 A	Screw	3
12	52904 G	Cast-Off Wire	1
13	57 WD	Nipper Spring Screw, for Styles 53100 A, D, E	1
14	15438 C	Nipper Spring, for Styles 53100 A, D, E	1
15	57 WB	Nipper Spring Plate, for Styles 53100 A, D, E	1
16	43296	Thread Nipper Base, for Styles 53100 A, D, E	1
17	605 A	Screw, for Styles 53100 A, D, E	1
18	98 A	Screw	1
19	20	Washer	1
20	539	Frame Thread Eyelet	1
21	53191	Looper Thread Guard	1
22	51758	Looper Thread Lead-In Eyelet	1
23	93	Screw	2
24	53182 E	Cam Gear Fork Frame Support Plate	1
25	AB21375 AH	Belt Guard	1
26	22570 A	Screw	10
27	93	Screw	2
28	22570 A	Screw	2
29	53182 F	Cover Plate	1
30	53182 G	Gasket	1
31	53182 A	Crank Chamber Cover Gasket	1
32	53137 C	Needle Bar Frame Guide Plate, front	1
33	22760 B	Screw	2
34	53137 D	Needle Bar Frame Guide Plate, rear	1
35	376	Screw	1
36	22541 B	Screw	3
37	53182	Crank Chamber Cover	1
38	39582 L	Oil Cap	1
39	52882 AC	Oil Cap Torsion Spring	1
40	50-789 Blk.	Oil Cap Hinge Pin	1
41	22564 B	Screw	2
42	53182 N	Oil Shield	1
43	53182 B	Baffle Plate	1
44	53182 C	Needle Lever Bearing Oiler	1
45	719	Screw	2
46	22565	Screw	1
47	53170	Take-Up Wire	1
48	53182 D	Needle Bar Frame Cover	1
49	22565	Screw	3
50	51294 R	Screw	1
51	35731 A	Presser Bar Connection Guide Plate	2
52	51294 P	Oil Tube Clamp	1
53	22513	Screw	3
54	7947	Nut	1
55	53182 K	Gasket	1
56	53182 J	Head Cover	1
57	53182 L	Felt Liner	1
58	22569 B	Screw	5
59	22848	Screw	3
60	20	Washer	3
61	51282 AH	Oil Shield, end and back, for Styles 53100 A, B, C, D	1
62	53137 A	Needle Bar Frame Guide Pin	2
63	22889 A	Plug Screw	1
64	539	Needle Thread Eyelet	1
65	20	Washer	1
66	22848	Screw	1
67	53182 M	End Gasket	1

From the library of: Superior Sewing Machine & Supply LLC

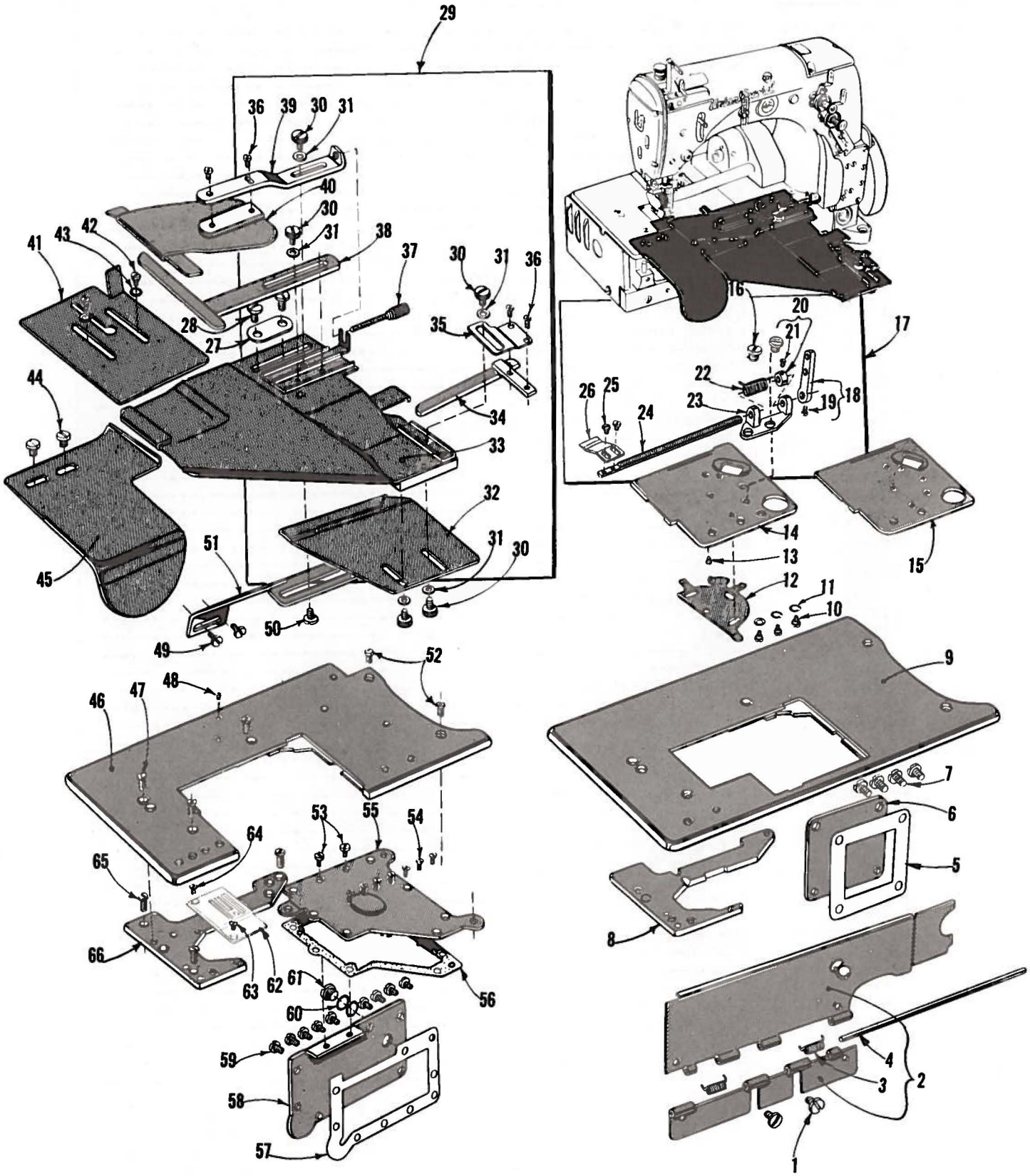

From the library of: Superior Sewing Machine & Supply LLC

CLOTH PLATES, CLOTH PLATE COVERS, MISCELLANEOUS COVERS AND ATTACHMENTS

Ref. No.	Part No.	Description	Amt. Req.
1	25 S	Screw	2
2	51282 AJ	Oil Shield, front, for Styles 53100 A, C, D, E	1
3	51282 AK	Spring	2
4	52978 G	Hinge Pin	1
5	52882 U	Gasket, for Styles 53100 A, D, E	1
6	52882 AE	Crank Chamber Cover, for Styles 53100 A, D, E	1
7	22548	Screw, for Styles 53100 A, D, E	4
8	51480 C	Throat Plate Support, for Style 53100 E	1
9	51301 D	Cloth Plate, for Styles 53100 A, D, E	1
10	22760 A	Screw, for Styles 53100 A, D, E	3
11	35772 H	Washer, for Styles 53100 A, D, E	3
12	51281 AC	Cloth Plate Cover Spring, for Styles 53100 A, D, E	1
13	22845 B	Pivot Screw, for Styles 53100 A, D, E	1
14	51281 AJ-219	Cloth Plate Cover, for Style 53100 E	1
15	51281 T-219	Cloth Plate Cover, for Styles 53100 A, D	1
16	25 C	Screw, for Style 53100 E	2
17	29480 BZ	Auxiliary Presser Plate Assembly, for Style 53100 E	1
18	39531 AR	Operating Lever	1
19	77 A	Screw	1
20	39531 B	Shaft Collar	1
21	604	Screw	1
22	39531 C	Spring	1
23	53132 B	Auxiliary Pressure Plate Bracket	1
24	53132 A	Pressure Plate Shaft	1
25	22561	Screw	2
26	53132	Auxiliary Pressure Plate	1
27	23425 V	Washer Plate	1
28	22514	Screw, for Style 53100 B	2
29	23450 L	Waistband Folder, complete, for Style 53100 B	1
30	188 D	Screw	5
31	8372 A	Washer	5
32	23450 U	Lower Scroll, adjustable	1
33	23450 M	Folder Base	1
34	23450 P	Adjustable Waistband Guide, lower	1
35	23450 R	Adjustable Support, for waistband guide, lower	1
36	90	Screw	4
37	23450 V	Adjusting Screw	1
38	23450 N	Adjustable Waistband Guide, upper	1
39	23450 T	Top Scroll Support, adjustable	1
40	23450 S	Top Scroll	1
41	53102	Cloth Plate Cover, for Styles 53100 B, C	1
42	22760 A	Screw	2
43	35772 H	Washer	2
44	25 C	Screw	2
45	23450 W	Edge Guide, for Style 53100 B	1
46	53101	Cloth Plate, for Styles 53100 B, C	1
47	80	Screw	3
48	22845 B	Screw	1
49	88 D	Screw	2
50	25 S	Screw	1
51	23437 G	Folder Support Bracket, for Style 53100 B	1
52	22839 C	Screw	2
53	22585 A	Screw	2
54	22524	Screw	7
55	53782 B	Oil Reservoir Top Cover	1
56	51382 A	Gasket	1
57	52982 E	Gasket	1
58	52982 D	Oil Reservoir Back Cover	1
59	22848	Screw	9
60	41394 A	Gasket	2
61	22733 B	Screw	1
62		Throat Plate (See Page 37)	1
63	222 D	Screw, for Styles 53100 B, C	1
64	87	Screw, for Styles 53100 B, C	1
	87	Screw, for Styles 53100 A, D, E	2
65	22839	Screw	3
66	51280 AA	Throat Plate Support, for Styles 53100 A, B, C, D	1

From the library of: Superior Sewing Machine & Supply LLC

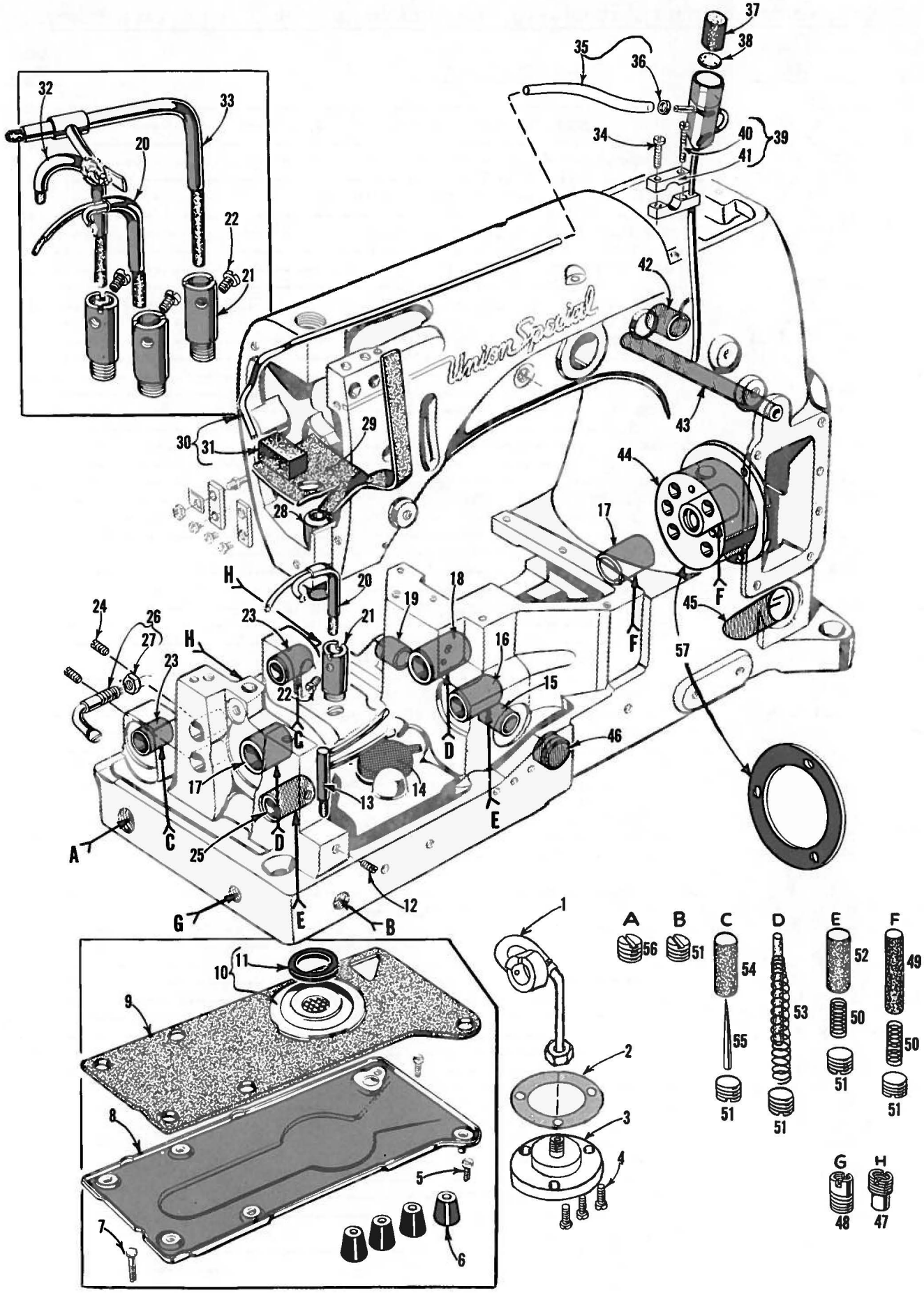

From the library of: Superior Sewing Machine & Supply LLC

MAINE FRAME, BUSHINGS AND MISCELLANEOUS OILING PARTS

Ref. No.	Part No.	Description	Amt. Req.
1	53193	Oil Pump Assembly	1
2	643-127 Blk.	Gasket	1
3	52393 H	Oil Pump Intake Housing	1
4	22569 B	Screw	3
5	22823 A	Screw	2
6	51295 A	Mounting Isolator	4
7	22823 B	Screw	1
8	51493 AY	Oil Pan Base Plate	1
9	51493 BG	Base Plate Felt Pad	1
10	51493 BH	Filter Cap Assembly	1
11	51493 BJ	Washer, sponge rubber	1
12	22560 B	Screw	1
13	52894 AK	Oil Tube, for looper rocker and left ball joint	1
14	51493 BK	Lint Filter Screen	1
15	52942 W	Looper Drive Lever Shaft Bushing, front	1
16	52944 U	Looper Rock Shaft Bushing, right	1
17	52890 C	Main Shaft Bushing, left and inner right	2
18	51290 T	Main Shaft Bushing, middle	1
19	52942 X	Looper Drive Lever Shaft Bushing, rear	1
20	52794 G	Oil Tube, for feed lift and looper avoid eccentric	1
21	52894 AB	Oil Tube Holder, for Styles 53100 A, B, C, D	1
	52894 AB	Oil Tube Holder, for Style 53100 E	3
22	90	Screw, for Styles 53100 A, B, C, D	1
	90	Screw, for Style 53100 E	3
23	52936	Feed Rocker Shaft Bushing	2
24	22597	Screw, for Style 53100 E	2
25	52944 T	Looper Rocker Shaft Bushing, left	1
26	660-136	Oil Tube, for feed crank link	1
27	258 A	Nut	1
28	51257 AA	Lower Presser Bar Bushing	1
29	666-210	Oil Attraction Felt	1
30	51294 V	Oil Siphon Tube	1
31	666-211	Felt Lint Filter	1
32	52894 AD	Oil Tube, for differential feed bar shaft, for Style 53100 E	1
33	52894 AE	Oil Tube, for differential feed bar guide, for Style 53100 E	1
34	22729 A	Screw	1
35	51294 Z	Oil Tube Connection	1
36	21212	Oil Siphon Connection Locking Ring	1
37	666-201	Felt Plug	1
38	666-209	Felt Plug	1
39	51294 S	Oil Siphon Assembly	1
40	22729 B	Screw	1
41	51294 K	Upper Clamp	1
42	52883 R	Presser Foot Lifter Lever Bushing	1
43	21657 X	Tension Release Lever Shaft Bushing	1
44	52891 B	Main Shaft Housing, including bushing	1
45	50-648 Blk.	Lucite Oil Gauge	1
46	52942 Y	Looper Rocker Shaft Synchronizing Stud	1
47	22889 C	Adapter Plug Screw	2
48	22889 D	Adapter Plug Screw	1
49	666-114	Oil Wick	2
50	35178 D	Spring	4
51	22571 A	Plug Screw	15
52	666-65	Oil Wick	2
53	666-118	Oil Wick	2
54	666-111	Oil Wick	2
55	666-179	Wedge Pin	2
56	22539 H	Plug Screw	1
57	56390 E	Crankshaft Bearing Housing Gasket	1

From the library of: Superior Sewing Machine & Supply LLC

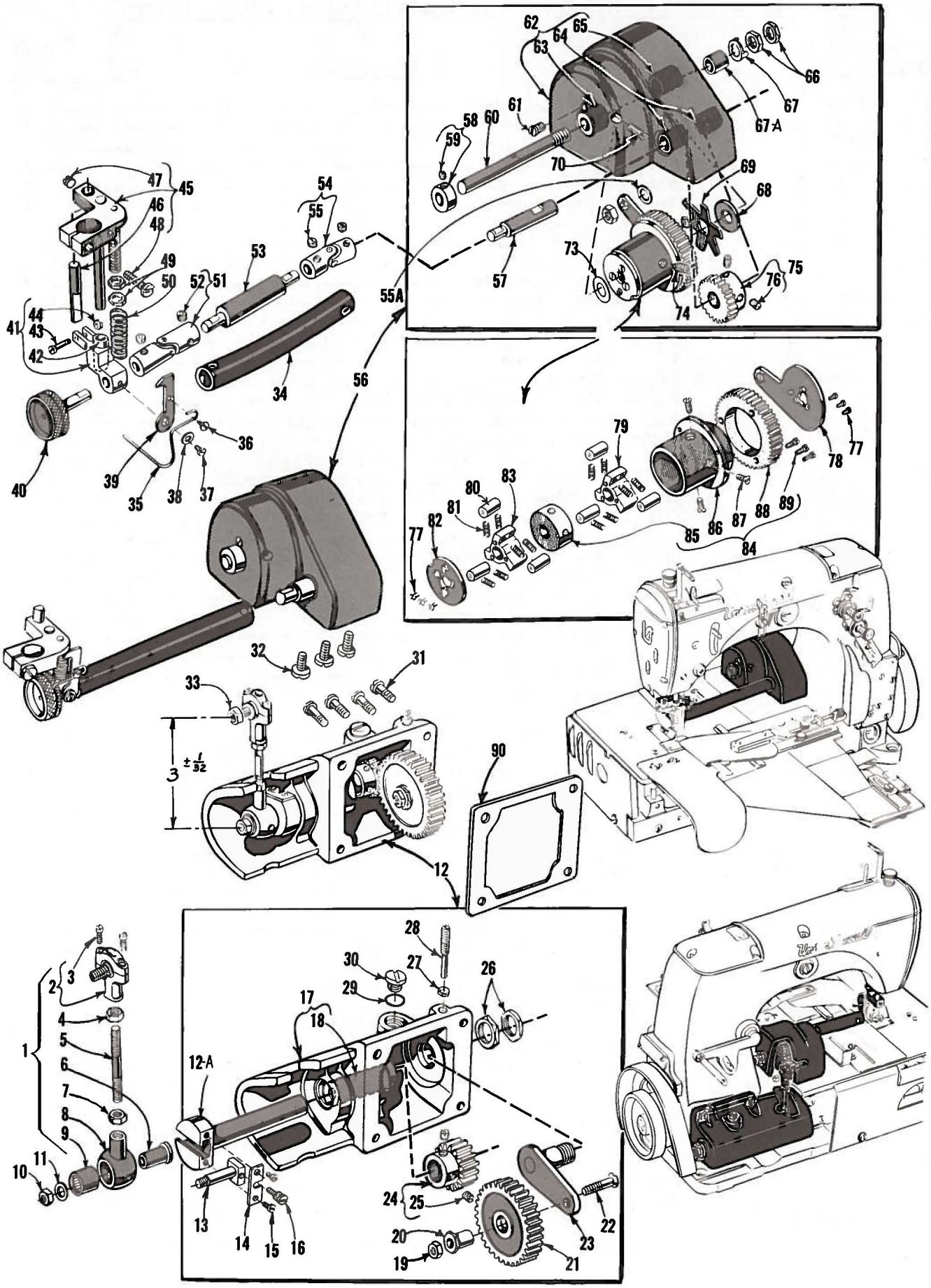

From the library of: Superior Sewing Machine & Supply LLC

FOR STYLES 53100 B AND C ONLY

CLUTCH ASSEMBLY, CLUTCH DRIVE SHAFT GEAR AND HOUSING ASSEMBLY

Ref. No.	Part No.	Description	Amt. Req.
1	29476 JD	Clutch Drive Connecting Rod Assembly	1
2	53139 H	Clutch Drive Ball Joint	1
3	97 A	Screw	2
4	18	Nut	1
5	41331 G	Connecting Rod	1
6	51236 F	Ferrule	1
7	269	Nut	1
8	53139 K	Crank Strap	1
9	660-169	Needle Bearing	1
10	269	Nut	1
11	20	Washer	1
12	29476 JF	Clutch Drive Shaft Gear and Housing Assembly	1
12A	53139 B	Clutch Drive Shaft	1
13	51236 G	Feed Crank Stud	1
14	51236 B	Feed Crank Stud Cap	1
15	22768	Screw	2
16	82	Screw	1
17	53139	Clutch Drive Housing	1
18	53139 A	Bushing	1
19	269	Nut	1
20	53139 E	Idler Gear Eccentric Bushing	1
21	53139 D	Idler Gear	1
22	22888 A	Screw	1
23	53139 F	Idler Gear Bracket	1
24	53139 C	Clutch Drive Shaft Gear	1
25	98	Screw	2
26	39153 G	Nut	2
27	12982	Nut	1
28	22791 D	Pin	1
29	41394 A	Gasket	1
30	22733 B	Screw	1
31	22861 B	Screw	4
32	22548	Screw	3
33	258	Nut	1
34	53139 Z	Roller Feed Shaft Guard	1
35	53139 AC	Feed Roller Stripper	1
36	22561	Screw	1
37	22768	Screw	1
38	41358	Washer	1
39	53139 AB	Feed Roller Lifter	1
40	53139 AD	Feed Roller, fine knurl	1
	53139 AE	Feed Roller, fifty teeth	1
	53139 AH	Feed Roller, coarse knurl	1
41	51239 AA	Feed Roller Block	1
42	51239 AB	Bushing	1
43	22747 B	Screw	1
44	43443 Q	Nut	1
45	53139 AA	Roller Feed Mounting Bracket	1
46	50-799 Blk.	Guide	1
47	88	Screw	1
48	22674	Screw	1
49	12987 A	Nut	2
50	53139 AG	Plunger Spring	1
51	51239 G	Universal Joint	1
52	22894 T	Set Screw	2
53	61339 F	Roller Feed Shaft	1
54	660-239	Universal Joint	1
55	22580	Set Screw	2
55A	6042 A	Washer	1
56	29476 JE	Clutch Assembly	1
57	53139 Y	Roller Feed Driving Gear Shaft	1
58	460	Collar	1
59	88	Screw	1
60	53139 W	Clutch Shaft	1
61	22892 C	Stop Screw	1
62	53139 L	Clutch Housing	1
63	53139 N	Bushing	1
64	53139 P	Bushing	2
65	53139 M	Bushing	1
66	11638 M	Nut	2
67	54278 Y	Driving Washer	1
67A	54278 W	Sleeve	1
68	54274 P	Washer	1
69	54274 N	Tension Spring	1
70	719	Set Screw	1
73	61351 C	Washer	1
74	22894 H	Spot Screw	1
75	53139 X	Roller Feed Gear	1
76	22651 CB-4	Set Screw	2
77	605	Screw	6
78	53139 R	Drive Lever	1
79	54274 H	Clutch Disc	1
80	54274 L	Clutch Roller	6
81	54274 M	Clutch Spring	12
82	54274 J	Support Plate	1
83	54274 H	Clutch Disc	1
84	53139 S	Clutch Barrel Assembly	1
85	53139 V	Core	1
86	53139 U	Barrel	1
87	538	Screw	3
88	53139 T	Clutch Barrel Gear	1
89	22593	Screw	3
90	54484 R	Gasket	1

From the library of: Superior Sewing Machine & Supply LLC

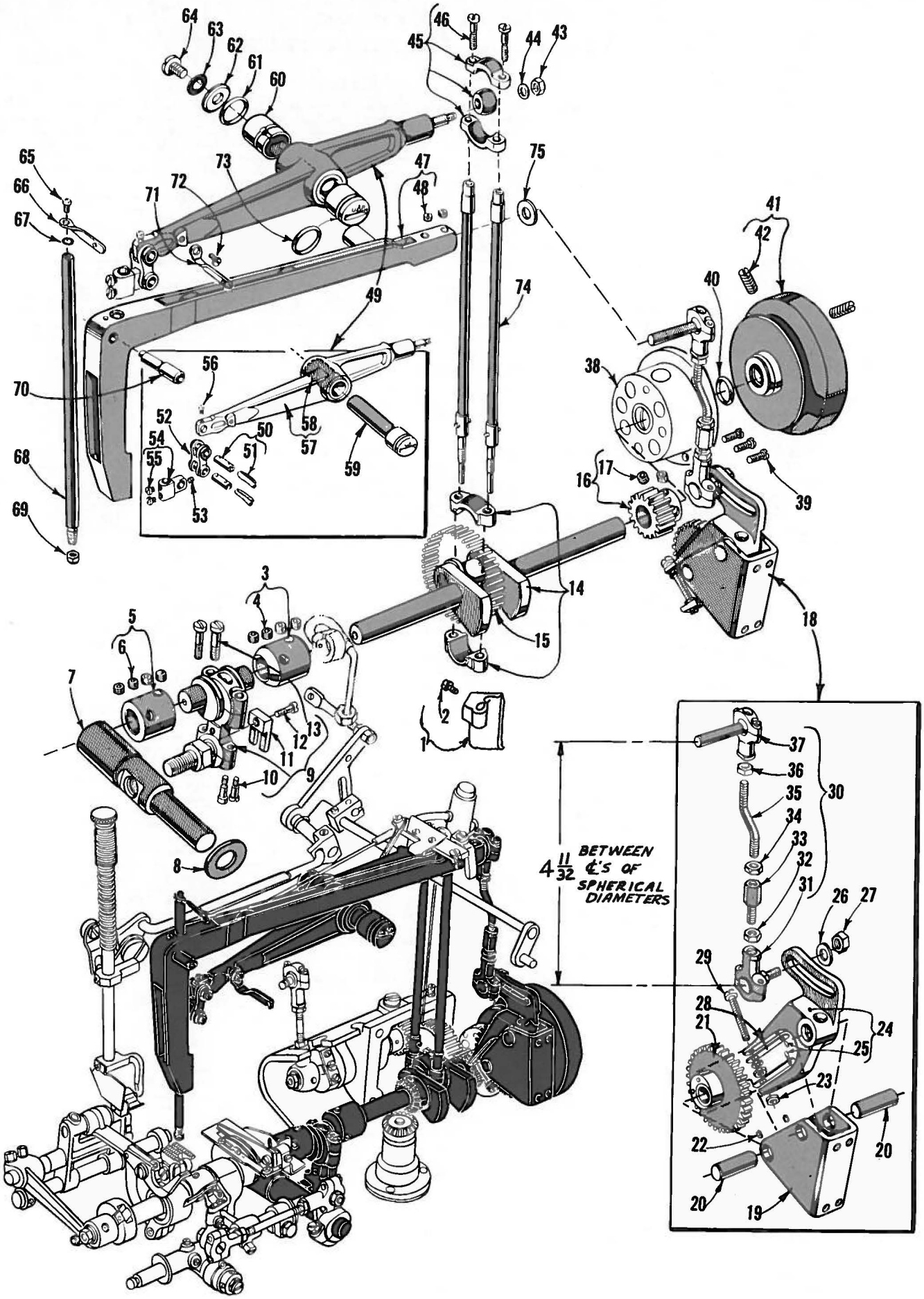

From the library of: Superior Sewing Machine & Supply LLC

CRANKSHAFT, NEEDLE LEVER AND LOOPER DRIVING PARTS

Ref. No.	Part No.	Description	Amt. Req.
1	54484 U	Oil Distributor	1
2	22564 D	Screw	1
3	52943 L	Collar	1
4	22894 X	Screw	4
5	56343 D	Collar	1
6	22894 X	Screw	4
7	52942 A	Looper Drive Lever Rocker Shaft	1
8	52951 C	Washer	1
9	29476 LE	Looper Driving Lever Crank Assembly	1
10	22729 D	Screw, lower	2
11	51243 C	Ball Stud Guide	1
12	22729 D	Screw	1
13	22587	Screw, upper	2
14	29476 HL	Crankshaft Assembly, .910 inch throw	1
15	51216 M	Needle Bearing	28
16	53138 L	Cam Driving Gear	1
17	22894 X	Screw	2
18	29476 JZ	Cam Gear, Cam Gear Fork and Needle Bar Frame Connecting Rod Assembly	1
19	53138 E	Cam Gear Fork Frame	1
20	53138 F	Cam Gear Fork Shaft	2
21	53138 J	Cam Gear	1
22	22733	Screw	2
23	12934 A	Nut	3
24	53138 C	Cam Gear Fork and Adjusting Segment	1
25	50-774 Blk.	Pin	2
26	21657 E	Washer	1
27	18	Nut	1
28	53138 D-0420	Cam Gear Fork Wear Plate, .042 inch thick	2
	53138 D-0425	Cam Gear Fork Wear Plate, .0425 inch thick	2
	53138 D-0430	Cam Gear Fork Wear Plate, .043 inch thick	2
29	22874 F	Screw	1
30	53137 E	Needle Bar Frame Connecting Rod Assembly	1
31	53137 J	Ball Joint, lower	1
32	18	Nut	2
33	22841 H	Adjusting Screw	1
34	269	Nut	1
35	53137 H	Connecting Rod	1
36	18	Nut	1
37	53137 F	Ball Joint, upper	1
38	52891 B	Crankshaft Bushing Housing, including bushing	1
39	22569 B	Screw	3
40	660-202	"O" Ring, for pulley	1
41	52921 B	Pulley	1
42	22894 G	Screw	2
43	51216 P	Nut	1
44	51216 N	Washer	1
45	29066 R	Needle Lever Connecting Rod and Upper Bearing Assembly	1
46	22559 G	Screw	2
47	53137	Needle Bar Frame	1
48	22894 T	Screw	2
49	29348 T	Needle Lever Assembly	1
50	51054	Feed Crank Pin	2
51	666-149	Lubricating Felt	1
52	56354 A	Needle Bar Link	1
53	78	Screw	1
54	35759	Needle Bar Connection	1
55	88 A	Screw	2
56	77	Screw	1
57	53115	Needle Lever	1
58	51250 A	Bushing	1
59	56350 A	Needle Lever Stud	1
60	51150	Needle Lever Shaft Stop Collar	1
61	660-212	Oil Seal Ring	1
62	51250 D	Washer	1
63	51250 F	Gasket	1
64	22586 R	Screw	1
65	22768	Screw	1
66	56358	Needle Bar Thread Eyelet	1
67	27-435 Blk.	Needle Bar Thread Washer	1
68	53117 A	Needle Bar	1
69	56	Needle Clamp Nut	1
70	53137 M	Needle Bar Frame Pivot Pin	1
71	56358 A	Needle Lever Thread Eyelet	1
72	22768	Screw	1
73	660-212	Oil Seal Ring	2
74	51216 G	Needle Lever Connecting Rod	2
75	15444 F	Washer, redwood	1
76	54484 U	Oil Distributor	1
77	22564 D	Screw	1

From the library of: Superior Sewing Machine & Supply LLC

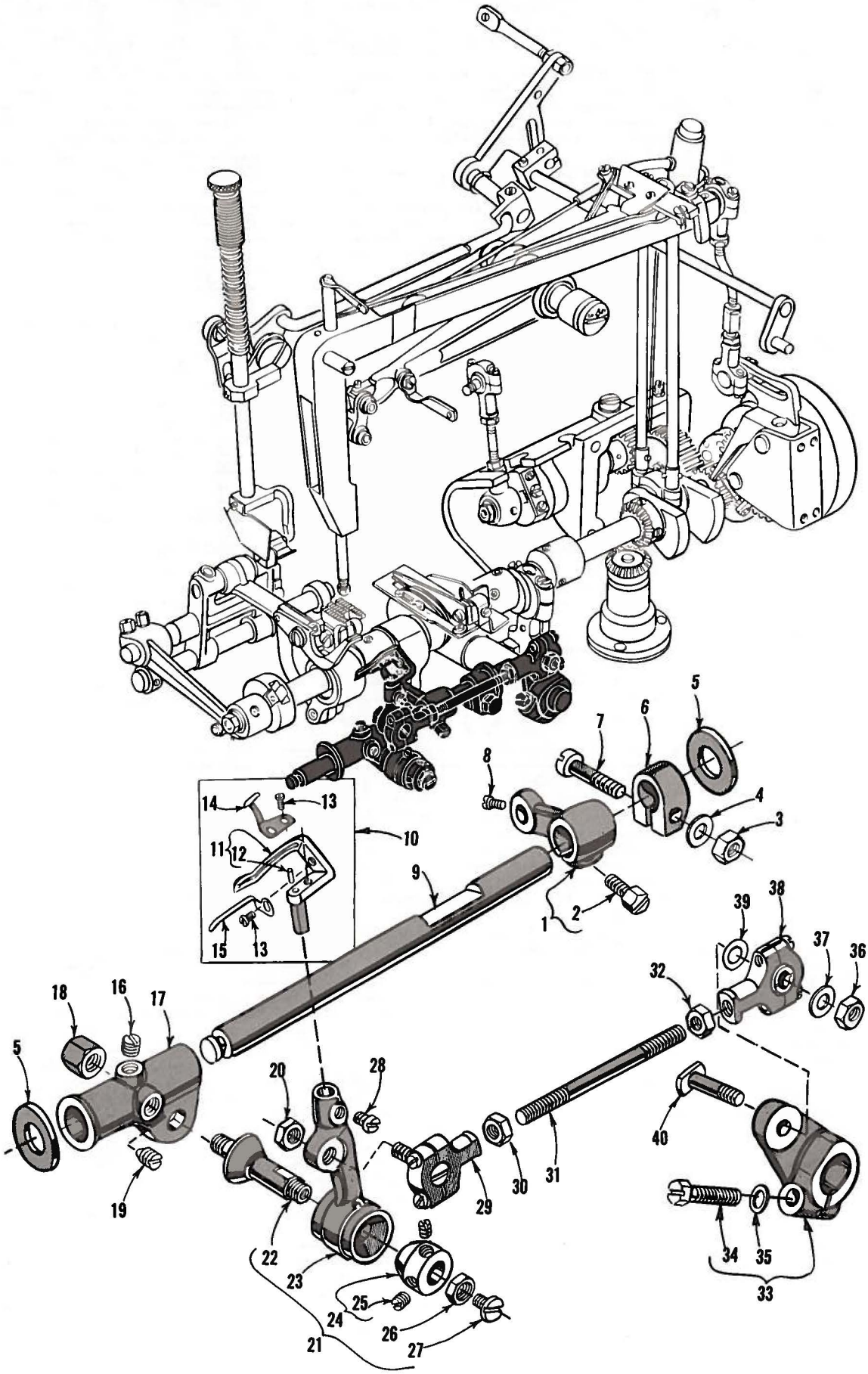

From the library of: Superior Sewing Machine & Supply LLC

LOOPER ROCKER AND CONNECTING ROD PARTS

Ref. No.	Part No.	Description	Amt. Req.
1	51244 B	Looper Rocker Shaft Arm	1
2	22519 H	Screw	1
3	18	Nut	1
4	51216 N	Washer	1
5	51244 L	Thrust Washer	2
6	51244 N	Looper Rocker Frame Clamp Collar	1
7	55244 G	Looper Rocker Shaft Collar Stud	1
8	22768	Screw	1
9	51144	Looper Rocker Shaft	1
10	53108 C	Looper Assembly	1
11	53108 B	Looper	1
12	1740	Pin	1
13	22738 B	Screw	2
14	53111 A	Looper Retainer, front	1
15	53111	Looper Retainer, bottom	1
16	98	Screw	1
17	51244	Looper Rocker Frame	1
18	51246	Looper Rocker Stud Nut	1
19	96	Screw	1
20	18	Nut	1
21	29192	Looper Rocker Assembly	1
22	51745	Looper Rocker Cone Stud	1
23	51213	Looper Rocker	1
24	15465 F	Looper Rocker Cone	1
25	88	Screw	2
26	258 A	Nut	1
27	22829	Screw	1
28	73	Screw	1
29	55241 N	Looper Connecting Rod Ball Joint, left	1
30	269	Nut	1
31	39141	Looper Connecting Rod	1
32	18	Nut	1
33	52942 P	Looper Drive Lever	1
34	22882 A	Screw	1
35	51242 M	Washer	1
36	18	Nut	1
37	20	Washer	1
38	52941 D	Looper Connecting Rod Ball Joint, right	1
39	41355 U-4	Shim, .004 inch thick (as required)	
	41355 U-5	Shim, .005 inch thick (as required)	
	41355 U-6	Shim, .006 inch thick (as required)	
	41355 U-7	Shim, .007 inch thick (as required)	
	41355 U-8	Shim, .008 inch thick (as required)	
	41355 U-9	Shim, .009 inch thick (as required)	
40	52942 R	Looper Lever Stud	1

From the library of: Superior Sewing Machine & Supply LLC

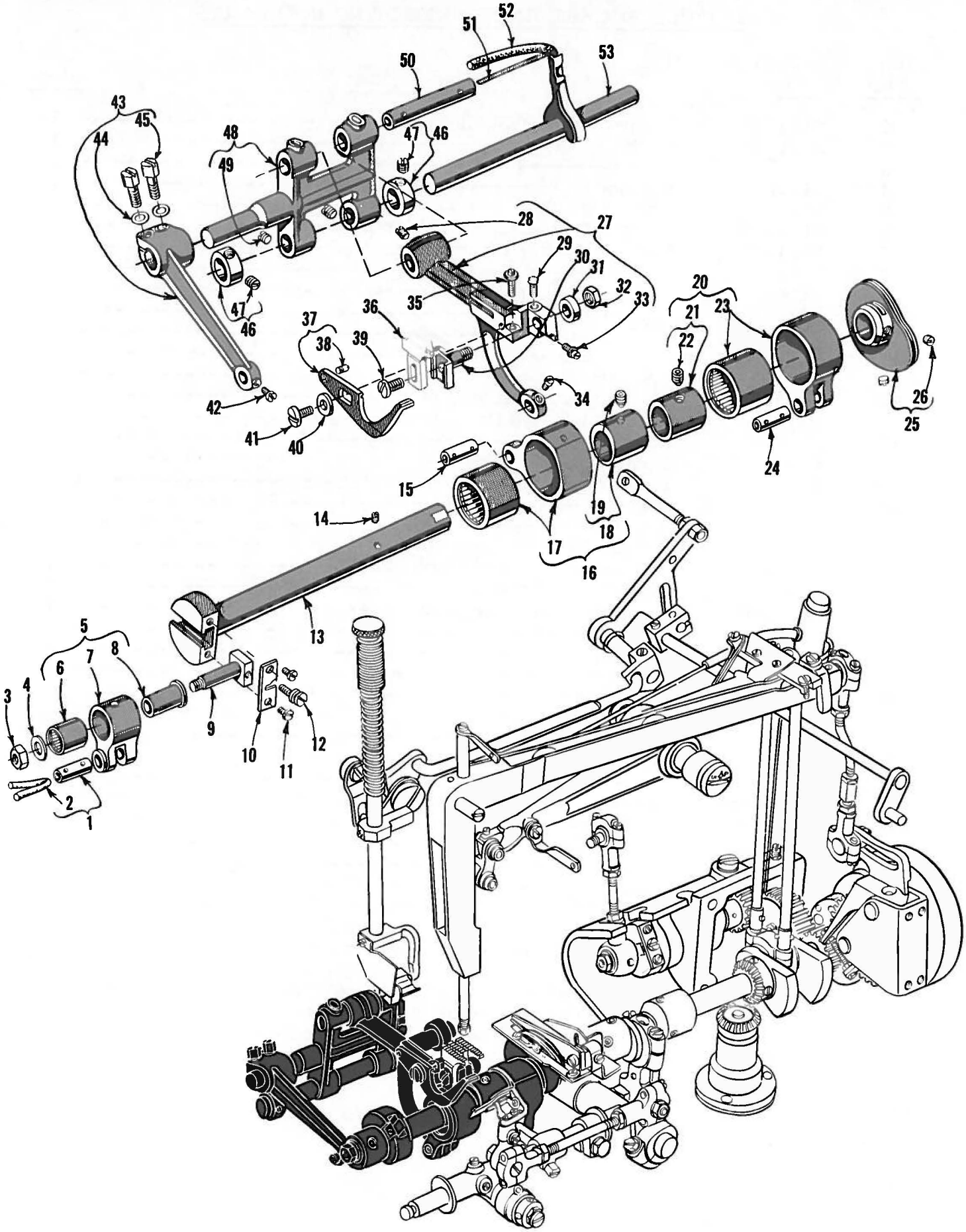

From the library of: Superior Sewing Machine & Supply LLC

MAIN SHAFT AND FEED MECHANISM

Ref. No.	Part No.	Description	Amt. Req.
1	51054	Link Pin	1
2	666-149	Oil Wick	1
3	269	Nut	1
4	20	Washer	1
5	51236 E	Feed Crank Link Assembly	1
6	660-169	Needle Bearing	1
7	51236 D	Feed Crank Link	1
8	51236 F	Feed Crank Link Ferrule	1
9	51236 G	Feed Crank Stud	1
10	51236 B	Feed Crank Stud Cap	1
11	22768	Screw	2
12	82	Screw	1
13	52922 C	Main Shaft, for Styles 53100 A, B, C, D	1
14	22801	Screw	1
15	51236 A	Link Pin	1
16	29476 DR	Feed Lift Eccentric Assembly, for Styles 53100 A, B, C, D	1
17	51145 A	Eccentric Bearing	1
18	51142 C	Eccentric, .080 inch throw	1
19	22894 D	Screw	1
20	29476 DX	Looper Avoid Eccentric Assembly	1
21	51306	Eccentric, .072 inch throw	1
22	22894 D	Screw	1
23	51145 A	Eccentric Bearing	1
24	51236 A	Link Pin	1
25	52923 D	Take-up	1
26	22580 D	Screw	2
27	51134	Feed Bar, for Styles 53100 A, B, C, D	1
28	22560 B	Screw	1
29	538	Feed Dog Height Adjusting Screw	1
30	56334 E	Feed Dog Holder	1
31	51134 J	Feed Dog Holder Washer	1
32	258 A	Nut	1
33	22863	Feed Dog Holder Adjusting Screw	1
34	77	Screw	1
35	22834	Needle Guard Adjusting Screw, for Styles 53100 A, B, C, D	1
36		Feed Dog (See Page 37)	1
37	53125	Needle Guard, for Styles 53100 A, B, C, D	1
38	22801	Stud Screw	1
39	22528	Screw, for feed dog on Styles 53100 A, B, C, D	1
40	51225 W	Washer, for needle guard on Styles 53100 A, B, C, D	1
41	22585 B	Screw, for needle guard on Styles 53100 A, B, C, D	1
42	77	Screw	1
43	51235 A	Feed Rocker Arm, for Styles 53100 A, B, C, D	1
44	51235 G	Washer	2
45	22519 C	Screw	2
46	482	Collar	2
47	98	Screw	1
48	51235	Feed Rocker, for Styles 53100 A, B, C, D	1
49	98	Screw	2
50	51134 C	Feed Bar Shaft	1
51	51134 R	Lubricating Felt Guard, for Styles 53100 A, B, C, D	1
52	51134 P	Lubricating Felt, for Styles 53100 A, B, C, D	1
53	8	Feed Rocker Shaft	1

From the library of: Superior Sewing Machine & Supply LLC

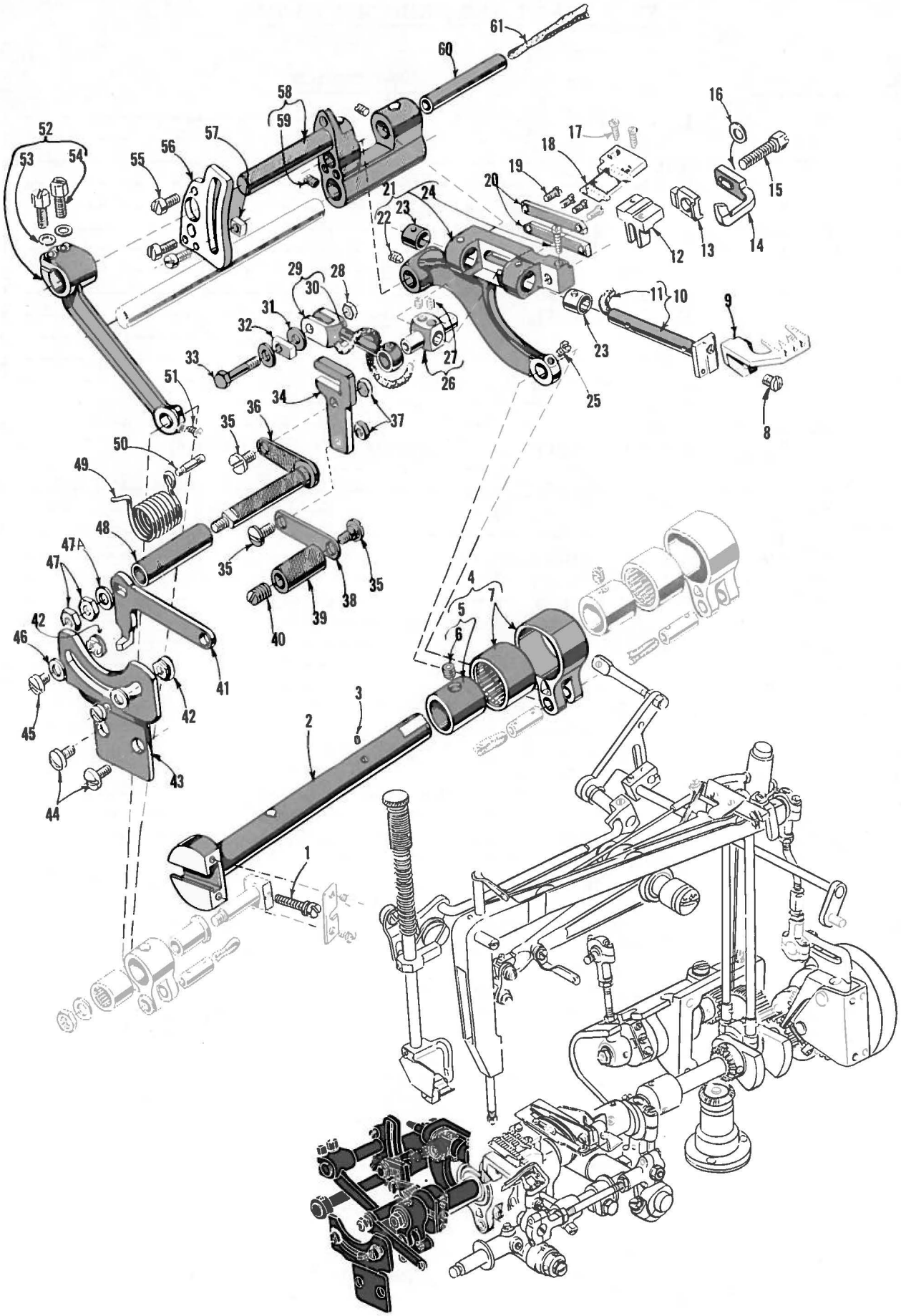

From the library of: Superior Sewing Machine & Supply LLC

FOR STYLE 53100 E ONLY

MAIN SHAFT AND FEED MECHANISM

Ref. No.	Part No.	Description	Amt. Req.
1	82	Screw	1
2	52822 B	Main Shaft	1
3	22801	Screw	1
4	29476 DV	Feed Lift Eccentric Assembly	1
5	51406	Feed Lift Eccentric, .062 inch throw	1
6	22894 D	Screw	1
7	51145 A	Eccentric Bearing	1
8	90	Screw	1
9	3026 A	Differential Feed Dog (Also See Page 37)	1
10	52834 H	Differential Feed Bar	1
11	CL21	Oil Wick	1
12	52853	Main Feed Dog Holder	1
13	52925 D	Needle Guard Holder	1
14	53125 A	Needle Guard	1
15	22519 J	Screw	1
16	51235 G	Washer	1
17	22593	Screw	2
18	52805 D-16	Main Feed Dog (Also See Page 37)	1
19	22593	Screw	4
20	39237 D	Differential Feed Bar Guide Plate	2
21	52834	Main Feed Bar	1
22	22560 B	Screw	1
23	39237 G	Bushing	2
24	22747	Feed Dog Height Adjusting Screw	1
25	77	Screw	1
26	39237	Differential Feed Bar Guide	1
27	22565 C	Screw	2
28	907	Nut	1
29	52835 V	Differential Feed Bar Driving Link	1
30	CL21	Oil Wick	1
31	51225 W	Washer	2
32	52835 S	Differential Feed Fork Block	1
33	22868 A	Screw	1
34	52835 Q	Differential Feed Fork	1
35	22758 B	Screw	3
36	51435	Differential Feed Control Lever, rear	1
37	12934 A	Nut	2
38	52835 G	Control Lever Link	1
39	52835 U	Pivot Stud Insert	1
40	719	Screw	1
41	52835	Differential Feed Control Lever	1
42	43139 A	Indicator Stop	2
43	52835 N	Control Lever Stop Plate	1
44	22848	Screw	2
45	25 CC	Screw	2
46	8372 A	Indicator Stop Washer	2
47	9937	Nut	2
47A	20	Washer	1
48	51435 B	Differential Feed Control Lever Bushing	1
49	52835 K	Control Lever Spring	1
50	61267 G	Lifter Lever Spring Pin	1
51	77	Screw	1
52	52836 C	Feed Rocker Arm	1
53	51235 G	Washer	2
54	22519 C	Screw	2
55	22516	Screw	3
56	52836 H	Feed Rocker Segment Plate	1
57	57836 F	Differential Feed Bar Driving Link Slide Block	1
58	52836	Feed Rocker	1
59	89	Screw	2
60	51134 C	Feed Bar Shaft	1
61		Wool Yarn	1

From the library of: Superior Sewing Machine & Supply LLC

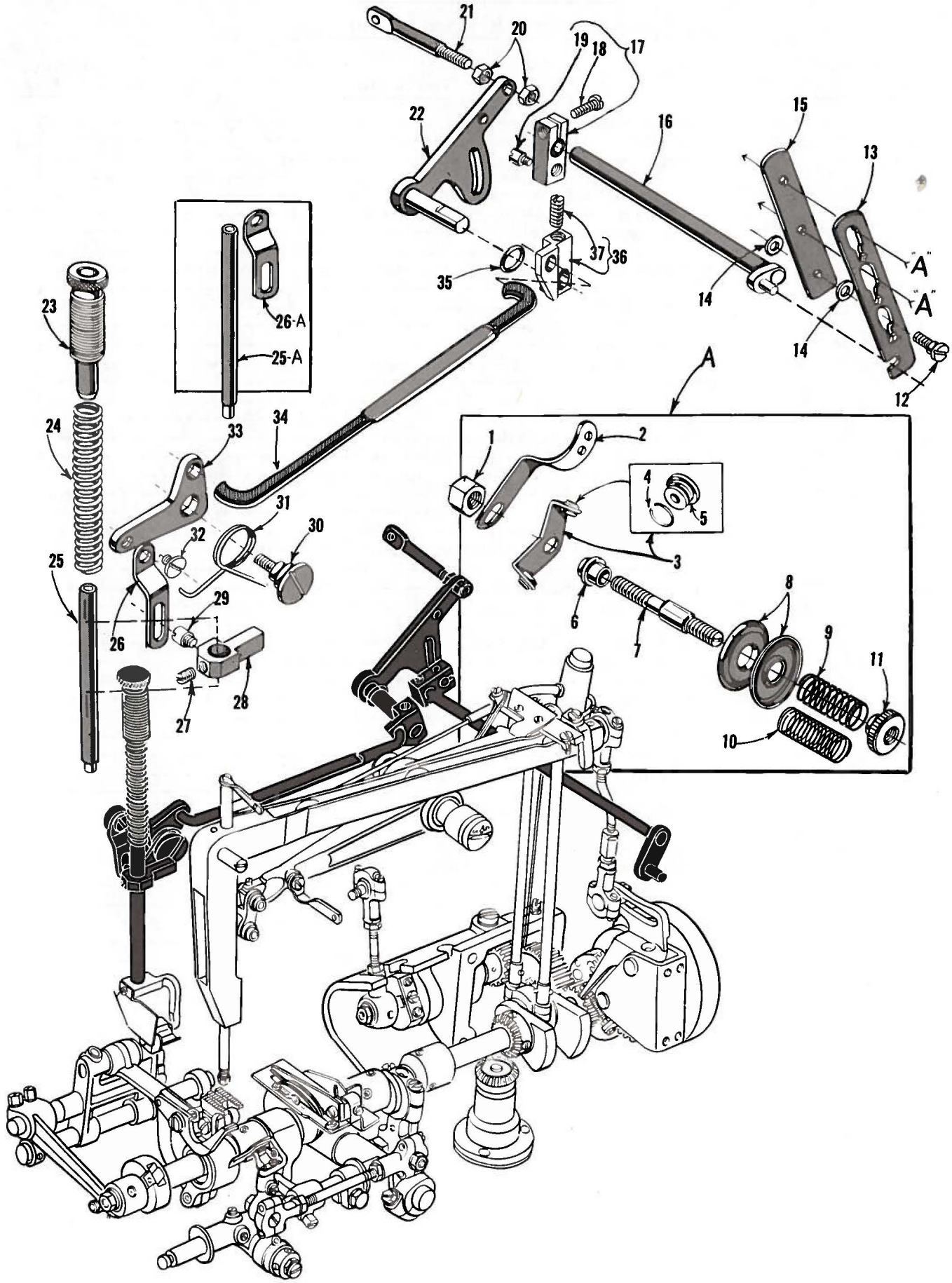

From the library of: Superior Sewing Machine & Supply LLC

THREAD TENSION AND FOOT LIFTER LEVER PARTS

Ref. No.	Part No.	Description	Amt. Req.
1	43266	Nut	1
2	51491 C	Lead-in Thread Eyelet	2
3	51292 D	Tension Thread Eyelet	2
4	668-25	Eyelet	2
5	668-28	Eyelet Locking Ring	2
6	51292 A	Tension Post Ferrule	2
7	51292 G	Tension Post	2
8	109	Tension Disc	4
9	51292 F-8	Tension Spring (needle)	1
10	51292 F-2	Tension Spring (looper)	1
11	51292 C	Tension Nut	2
12	22598 C	Tension Release Stud	1
13	21657-3	Tension Disc Separator	1
14	80557	Washer	2
15	52892	Tension Post Support	1
16	21657 W	Tension Release Lever Shaft	1
17	21657 Y	Tension Release Lever Connection	1
18	22596	Screw	1
19	402	Screw	1
20	258	Nut, for Styles 53100 B, C	2
21	35780 B	Lifter Lever Extension, for Styles 53100 B, C	1
22	51283 H	Presser Foot Lifter Lever	1
23	56356	Presser Spring Regulator	1
24	51256 C	Presser Bar Spring	1
25	53157	Presser Bar, for Styles 53100 B, C	1
25A	51257 K	Presser Bar, for Styles 53100 A, D, E	1
26	53183 A	Presser Foot Lifter Lever Link, for Styles 53100 B, C	1
26A	53783 A	Presser Foot Lifter Lever Link, for Styles 53100 A, D, E	1
27	531	Screw	1
28	51257 M	Presser Bar Connection and Guide	1
29	402	Screw	1
30	22557 B	Screw	1
31	52883 S	Presser Foot Lifter Lever Bell Crank Spring	1
32	22758 C	Screw	1
33	53783 L	Presser Foot Lifter Lever Bell Crank	1
34	53783 M	Presser Foot Lifter Lever Connecting Rod	1
35	660-207	Oil Seal Ring	1
36	53783 N	Presser Foot Lifter Lever, internal	1
37	22537	Screw	1

From the library of: Superior Sewing Machine & Supply LLC

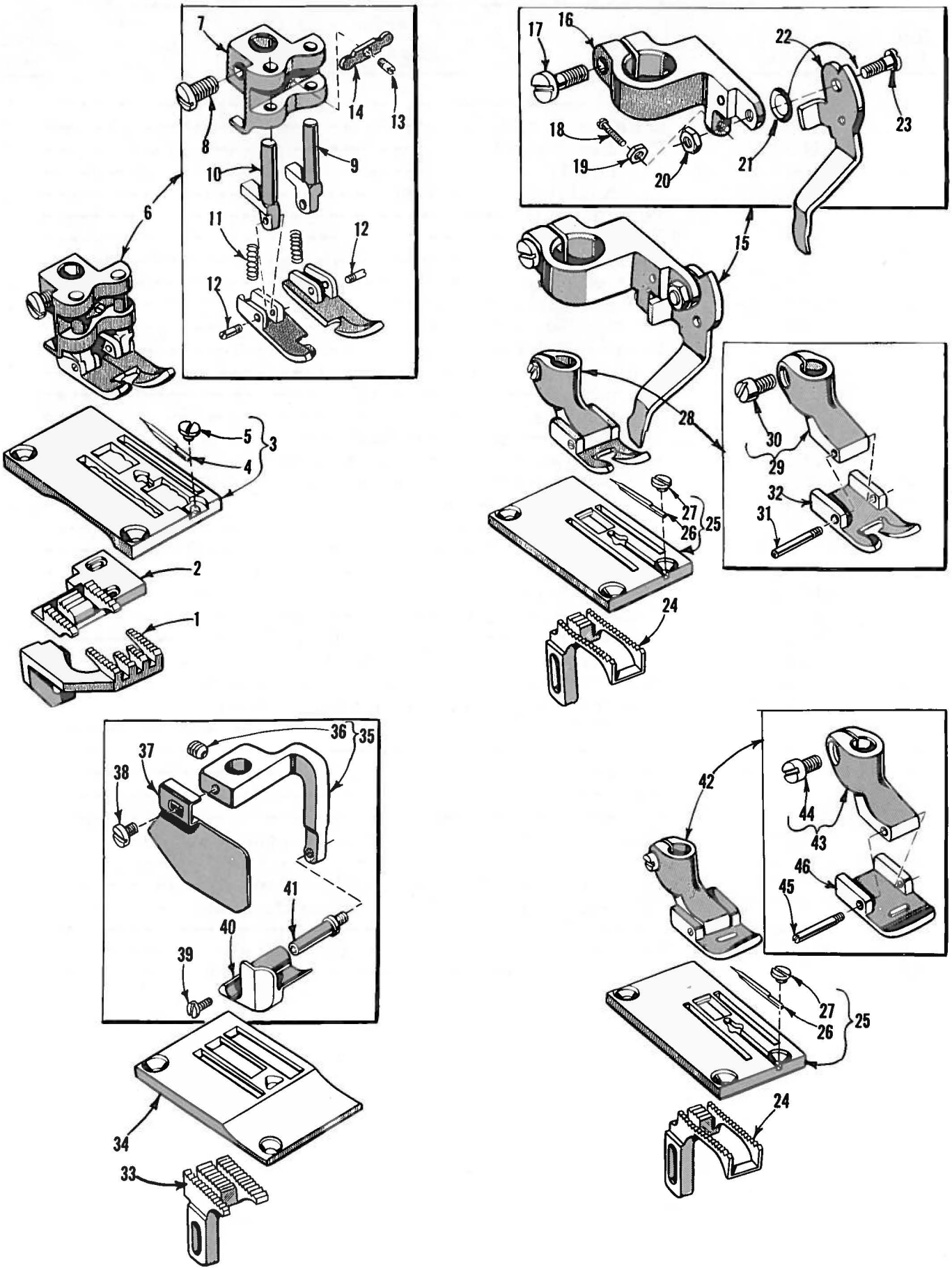

From the library of: Superior Sewing Machine & Supply LLC

FEED DOGS, THROAT PLATES AND PRESSER FEET

Ref. No.	Part No.	Description	Amt. Req.
1	3026 A	Differential Feed Dog, for Style 53100 E	1
2	52805 D-16	Main Feed Dog, for Style 53100 E	1
3	53124 C	Throat Plate, for Style 53100 E	1
4	53131 C	Stitch Tongue	1
5	187 B	Screw	1
6	53120 D	Presser Foot, for Style 53100 E	1
7	51230 U	Presser Foot Shank	1
8	22570 A	Screw	1
9	61130 D	Presser Foot Plunger, right	1
10	61130 E	Presser Foot Plunger, left	1
11	6990	Spring	2
12	22799 U	Hinge Screw	2
13	22799 N	Screw	1
14	61130 F	Equalizer	1
15	23441 F	Edge Guide Assembly, for Styles 53100 D, E	1
16	23441 H	Edge Guide Bracket	1
17	22596	Screw	1
18	22738 D	Screw	1
19	60078 Z	Nut	1
20	41071 G	Nut	1
21	35772 H	Spring Washer	1
22	23441 G	Edge Guide	1
23	22585	Screw	1
24	53105 A	Feed Dog, for Styles 53100 A, D	1
25	53124 A	Throat Plate, for Styles 53100 A, D	1
26	53131 C	Stitch Tongue	1
27	187 B	Screw	1
28	53120 B	Presser Foot, for Style 53100 D	1
29	53130 A	Presser Foot Shank	1
30	91	Screw	1
31	22799 B	Hinge Screw	1
32	53130 E	Presser Foot Bottom	1
33	53105 B	Feed Dog, for Styles 53100 B, C	1
34	53124 B	Throat Plate, for Styles 53100 B, C	1
35	53130 C	Presser Foot Shank, for Styles 53100 B, C	1
36	22894 W	Screw	1
37	53139 AF	Cloth Guard, for Styles 53100 B, C	1
38	28	Screw	1
39	22798 A	Screw	1
40	53130 B	Presser Foot Bottom, for Styles 53100 B, C	1
41	53130 D	Presser Foot Hinge Pin Stud, for Styles 53100 B, C	1
42	53120 C	Presser Foot, for Style 53100 A	1
43	53130 A	Presser Foot Shank	1
44	91	Screw	1
45	22799 B	Hinge Screw	1
46	53130 F	Presser Foot Bottom	1

From the library of: Superior Sewing Machine & Supply LLC

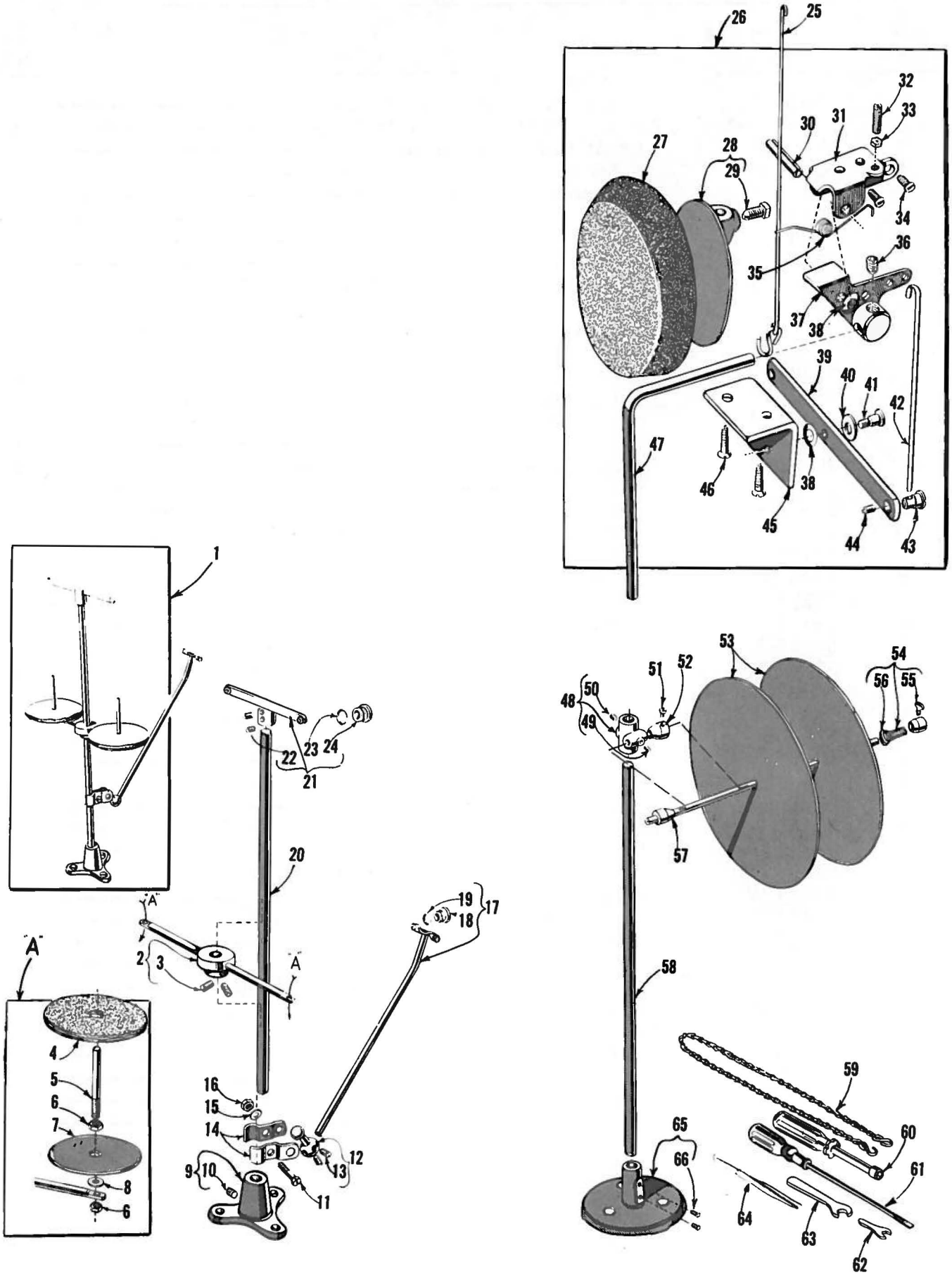

From the library of: Superior Sewing Machine & Supply LLC

THREAD STAND, KNEE PRESS AND TAPE REEL PARTS

Ref. No.	Part No.	Description	Amt. Req.
1	21101 H-2	Thread Stand, complete	1
2	21114 D-2	Spool Seat Support	1
3	22651 CD-5	Screw	2
4	21104 V	Pad	2
5	21114 W	Spool Pin	2
6	258 A	Nut	4
7	21114	Spool Seat Disc	2
8	652-16	Washer	2
9	21114 A	Thread Stand Base	1
10	22651 CD-4	Screw	1
11	22810	Screw	1
12	21114 T	Lead Eyelet Socket Ball	1
13	22651 CD-4	Screw	2
14	21114 U	Lead Eyelet Ball Split Socket	2
15	652-16	Washer	1
16	21104 H	Nut	1
17	21114 S-2	Lead Eyelet	1
18	21114 L	Eyelet	2
19	21114 M	Eyelet Locking Ring	2
20	21104 B-24	Thread Stand Rod, 24 inches long	1
21	21114 H-2	Eyelet Support	1
22	22651 CD-4	Screw	2
23	21114 M	Eyelet Locking Ring	2
24	21114 L	Eyelet	2
25	51493 BC	Lifter Link	1
26	21660 H	Knee Press Assembly, for Styles 53100 A, D, E	1
27	660-168	Knee Press Plate Cushion	1
28	21664	Knee Press Plate	1
29	69 FD	Screw	1
30	660-219 G	Roll Pin	1
31	21664 F	Mounting Bracket	1
32	92201	Screw	1
33	12982	Nut	1
34	80	Screw	2
35	21662 V	Torsion Spring	1
36	22650 CE-6	Screw	1
37	21662 R	Knee Press Lifter Arm	1
38	39536 AD	Spring Washer	2
39	21662 U	Knee Press Lever	1
40	43137 E	Washer	1
41	22557 A	Screw	1
42	21662 T	Knee Press Link	1
43	21662 S	Knee Press Link Connection	1
44	531	Screw	1
45	21664 C	Bracket	1
46		Wood Screw (#12 x 1 inch)	2
47	21663 A	Knee Press Plate Lever	1
48	21217 A	Tape Reel Axle Support, for Styles 53100 B, C	1
49	22650 CB-4	Screw	1
50	22651 CD-4	Screw	1
51	93 A	Screw, for Styles 53100 B, C	1
52	753	Tape Reel Disc Collar, for Styles 53100 B, C	1
53	21178 A	Tape Reel Disc, for Styles 53100 B, C	2
54	21177 A	Tape Reel Spring Collar, for Styles 53100 B, C	1
55	22647 K-24	Thumb Screw	1
56	1349 A-5	Tension Spring	1
57	21218	Tape Reel Axle, for Styles 53100 B, C	1
58	21104 B-20	Tape Reel Rod, 20 inches long, for Styles 53100 B, C	1
59	421 D-28	Treadle Chain, 28 inches long, for presser foot on Styles 53100 B, C	1
	421 D-38	Treadle Chain, 38 inches long, for differential feed on Style 53100 E	1
60	21388 AU	Wrench, for 3/8 inch hexagonal nut	1
61	21202	Screw Driver, 3/16 inch round blade, over-all length 9 3/8 inches	1
62	116	Wrench, for 9/32 inch nut	1
63	21388	Wrench, single end, for 3/8 inch nut	1
64	660-240	Thread Tweezer	1
65	21114 A	Tape Reel Base, for Styles 53100 B, C	1
66	22651 CD-4	Screw	2

From the library of: Superior Sewing Machine & Supply LLC

NUMERICAL INDEX OF PARTS

Part No.	Page No.
8	31
18	25, 27, 29
20	19, 25, 29, 31, 33
CL21	33
25 C	21
25 S	21
25 CC	33
27-435 Blk.	27
28	37
50-216 Blk.	19
50-648 Blk.	23
50-774 Blk.	27
50-789 Blk.	19
50-799 Blk.	25
56	27
57 WB	19
57 WD	19
69 FD	39
73	29
73 A	19
77	27, 31, 33
77 A	21
78	27
80	21, 39
82	25, 31, 33
87	21
87 U	19
88	25, 29
88 A	27
88 D	21
89	33
90	21, 23, 33
91	37
93	19
93 A	39
96	29
97 A	25
98	25, 29, 31
98 A	19
109	35
116	39
187 B	37
188 D	21
222 D	21
258	25, 35
258 A	23, 29, 31, 39
269	25, 27, 29, 31
376	19
402	35
421 D	39
460	25
482	31
531	35, 39
538	25, 31
539	19
604	21
605	25
605 A	19
643-127 Blk.	23
652-16	39
660-136	23
660-168	39
660-169	25, 31
660-202	27
660-207	35
660-212	27
660-219 G	39
660-239	25
660-240	39
666-65	23
666-111	23
666-114	23
666-118	23
666-149	27, 31
666-179	23
666-201	23
666-209	23
666-210	23
666-211	23
668-25	35
668-28	35
719	19, 25, 33
753	39
907	33
1349 A	39
1740	29
3026 A	33, 37
6042 A	25
6990	37
7947	19
8372 A	21, 33
9937	33
11638 M	25
12934 A	27, 33
12982	25, 39
12987 A	25
15438 C	19
15444 F	27
15465 F	29
21101 H	39
21104 B	39
21104 H	39
21104 V	39
21114	39
21114 A	39
21114 D	39
21114 H	39
21114 L	39
21114 M	39
21114 S	39
21114 T	39
21114 U	39
21114 W	39
21177 A	39
21178 A	39
21202	39
21212	23
21217 A	39
21218	39
AB21375 AH	19
21388	39
21388 AU	39
21657	35
21657 E	19, 27
21657 W	35
21657 X	23
21657 Y	35
21660 H	39
21662 R	39
21662 S	39
21662 T	39
21662 U	39
21662 V	39
21663 A	39
21664	39
21664 C	39
21664 F	39
22513	19
22514	21
22516	19, 33
22519 C	31, 33
22519 H	29
22519 J	33
22524	21
22528	19, 31
22537	35
22539 H	23
22541 B	19
22548	21, 25
22557 A	39
22557 B	35
22559 G	27
22560 B	27, 31, 33 33
22561	21, 25
22564 B	19
22564 D	27
22565	19
22565 C	33
22569 B	19, 23, 27
22570 A	19, 37
22571 A	23
22580	25
22580 D	31
22585	37
22585 A	21
22585 B	31
22586 R	27
22587	27
22593	25, 33
22596	35, 37
22597	23
22598 C	35
22647 K	39
22650 CB	39
22650 CE	39
22651 CB	25
22651 CD	39
22729 A	23
22729 B	23
22729 D	27
22733	27
22733 B	21, 25
22738 B	29
22738 D	37
22747	33
22747 B	25
22758 B	33
22758 C	35
22760 A	21
22760 B	19
22768	19, 25, 27, 29, 31
22791 D	25
22798 A	37
22799 B	37
22799 N	37
22799 U	37
22801	31, 33
22810	39
22823 A	23
22823 B	23
22829	29
22834	31
22839	21
22839 C	21
22841 H	27
22845 B	21
22848	19, 21, 33
22861 B	25
22863	31
22868 A	33
22874	25
22874 F	27
22882 A	29
22888 A	25
22889 A	19
22889 C	23
22889 D	23
22892 C	25
22894 D	31, 33
22894 G	27
22894 H	25
22894 T	25, 27
22894 W	37
22894 X	27
23425 V	21
23437 G	21
23441 F	37
23441 G	37
23441 H	37
23450 L	21
23450 M	21
23450 N	21
23450 P	21
23450 R	21
23450 S	21
23450 T	21
23450 U	21
23450 V	21
23450 W	21
29066 R	27
29192	29
29348 T	27
29476 DR	31
29476 DV	33
29476 DX	31
29476 HL	27
29476 JD	25
29476 JE	25
29476 JF	25
29476 JZ	27
22476 LE	27
29480 BZ	21
35178 D	23
35731 A	19
35759	27
35772 H	21, 37
35780 B	35
39141	29
39153 G	25
39237	33
39237 D	33
39237 G	33
39531 B	21
39531 C	21

NOTE: Only the basic part numbers are shown in the index. For various gauges, capacities, etc. available, refer to the listings on pages indicated.

From the library of: Superior Sewing Machine & Supply LLC

NUMERICAL INDEX OF PARTS

Part No.	Page No.
39531 AR	21
39536 AD	39
39582 L	19
41071 G	37
41331 G	25
41355 U	29
41358	25
41394 A	21, 25
43137 E	39
43139 A	33
43266	35
43296	19
43443 Q	25
51054	27, 31
51134	31
51134 C	31, 33
51134 J	31
51134 P	31
51134 R	31
51142 C	31
51144	29
51145 A	31, 33
51150	27
51213	29
51216 G	27
51216 M	27
51216 N	27, 29
51216 P	27
51225 W	31, 33
51230 U	37
51235	31
51235 A	31
51235 G	31, 33
51236 A	31
51236 B	25, 31
51236 D	31
51236 E	31
51236 F	25, 31
51236 G	25, 31
51239 G	25
51239 AA	25
51239 AB	25
51242 M	29
51243 C	27
51244	29
51244 B	29
51244 L	29
51244 N	29
51246	29
51250 A	27
51250 D	27
51250 F	27
51256 C	35
51257 K	35
51257 M	35
51257 AA	23
51280 AA	21
51281 T	21
51281 AC	21
51281 AJ	21
51282 AH	19
51282 AJ	21
51282 AK	21
51283 H	35
51290 T	23
51292 A	35
51292 C	35
51292 D	35
51292 F	35
51292 G	35
51294 K	23
51294 P	19
51294 R	19
51294 S	23
51294 V	23
51294 Z	23
51295 A	23
51301 D	21
51306	31
51382 A	21
51406	33
51435	33
51435 B	33
51480 C	21
51491 C	35
51493 AY	23
51493 BC	39
51493 BG	23
51493 BH	23
51493 BJ	23
51493 BK	23
51745	29
51758	19
52393 H	23
52794 G	23
52804 E	19
52805 D	33, 37
52822 B	33
52834	33
52834 H	33
52835	33
52835 G	33
52835 K	33
52835 N	33
52835 Q	33
52835 S	33
52835 U	33
52835 V	33
52836	33
52836 C	33
52836 H	33
52853	33
52882 U	21
52882 AC	19
52882 AE	21
52883 R	23
52883 S	35
52890 C	23
52891 B	23, 27
52892	35
52894 AB	23
52894 AD	23
52894 AE	23
52894 AK	23
52904 B	19
52904 E	19
52904 G	19
52921 B	27
52922 C	31
52923 D	31
52925 D	33
52936	23
52941 D	29
52942 A	27
52942 P	29
52942 R	29
52942 W	23
52942 X	23
52942 Y	23
52943 L	27
52944 T	23
52944 U	23
52951 C	27
52957 C	19
52958 D	19
52978 G	21
52982 D	21
52982 E	21
53101	21
53102	21
53105 A	37
53105 B	37
53108 B	29
53108 C	29
53111	29
53111 A	29
53115	27
53117 A	27
53120 B	37
53120 C	37
53120 D	37
53124 A	37
53124 B	37
53124 C	37
53125	31
53125 A	33
53130 A	37
53130 B	37
53130 C	37
53130 D	37
53130 E	37
53130 F	37
53131 C	37
53132	21
53132 A	21
53132 B	21
53137	27
53137 A	19
53137 C	19
53137 D	19
53137 E	27
53137 F	27
53137 H	27
53137 J	27
53137 M	27
53138 C	27
53138 D	27
53138 E	27
53138 F	27
53138 J	27
53138 L	27
53139	25
53139 A	25
53139 B	25
53139 C	25
53139 D	25
53139 E	25
53139 F	25
53139 H	25
53139 K	25
53139 L	25
53139 M	25
53139 N	25
53139 P	25
53139 R	25
53139 S	25
53139 T	25
53139 U	25
53139 V	25
53139 W	25
53139 X	25
53139 Y	25
53139 Z	25
53139 AA	25
53139 AB	25
53139 AC	25
53139 AD	25
53139 AE	25
53139 AF	37
53139 AG	25
53139 AH	25
53157	35
53170	19
53182	19
53182 A	19
53182 B	19
53182 C	19
53182 D	19
53182 E	19
53182 F	19
53182 G	19
53182 J	19
53182 K	19
53182 L	19
53182 M	19
53182 N	19
53183 A	35
53191	19
53193	23
53782 B	21
53783 A	35
53783 L	35
53783 M	35
53783 N	35
54274 H	25
54274 J	25
54274 L	25
54274 M	25
54274 N	25
54274 P	25
54278 W	25
54278 Y	25
54484 R	25
54484 U	27
55241 N	29
55244 G	29
56334 E	31
56343 D	27
56350 A	27
56354 A	27
56356	35
56358	27
56358 A	27
56390 E	23
57836 F	33
60078 Z	37
61130 D	37
61130 E	37
61130 F	37
61267 G	33
61339 F	25
61351 C	25
80557	35
92201	39

NOTE: Only the basic part numbers are shown in the index. For various gauges, capacities, etc. available refer to the listings on page indicated.

From the library of: Superior Sewing Machine & Supply LLC

Union Special Wants to Help You Cut Sewing Machine Maintenance Costs

Union Special is offering two practical systems to help pinpoint and reduce your sewing machine maintenance costs: a record keeping system to help spot machines requiring abnormally high maintenance, and a parts inventory system to speed routine repairs.

Machine Maintenance Records

Repair-prone machines or inexperienced competent operators can eat up your maintenance dollars in short order. To help spot these problems, Union Special suggests two variations of a simple maintenance record keeping system using cards provided by Union Special.

The first system utilizes a "Machine Maintenance Record" card (Form 237) for each sewing machine in a plant. When a repair is required, the card is pulled from the file and the repair date, parts used, and their cost are entered in the spaces provided and the card is refiled.

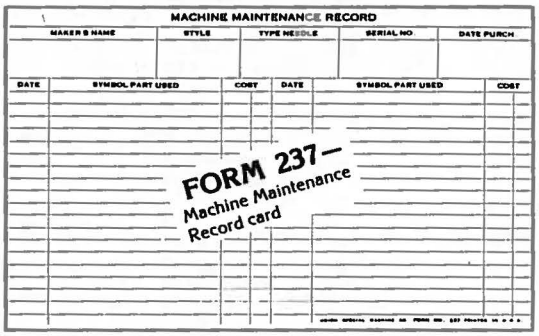

The second system is normally used when more detailed information on repair costs is desired. Two record cards are used: a "Repair Request Card" (Form 234), and a "Machine Repair Record" (Form 233). When a machine requires service, the forelady or foreman fills out the top of a "Repair Request Card" and gives it to a mechanic. He fills in the time the repair work is started, the parts used and their cost, and the completion time. This data is then transferred to the permanent "Machine Repair Record" kept in the office.

Whichever system is used, management now has an invaluable tool to reduce needless maintenance costs.

Repair Part Inventories

While record keeping tells management which machines require abnormally high maintenance, it does little to help reduce the downtime caused by routine repairs. To alleviate this situation, Union Special recommends that manufacturers establish a formal parts inventory system for each type of sewing machine they operate.

Excessive machine downtime and wasted hours by mechanics can be eliminated with an orderly in-plant inventory of the most commonly needed parts. There is no longer a need to cannibalize other machines for spare parts. Long waits for deliveries are avoided and machine downtime is kept to a minimum. The cost of a parts inventory is small when the overall savings are considered.

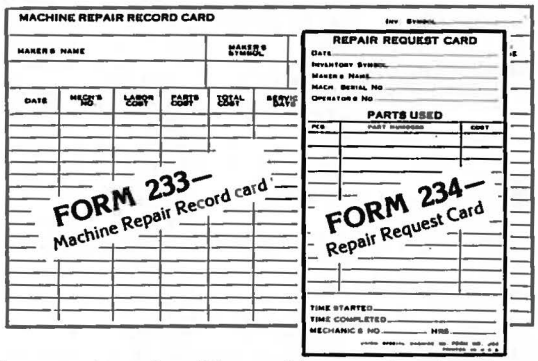

For free sample copies of the machine record cards and spare part inventory lists for a variety of the most popular machines, contact your local Union Special Representative or write direct to Union Special.

Union Special
Industrial Sewing Equipment

Style 53100 A

Suggested Minimum Spare Parts List*

Part Number	Description	Minimum Quantity Per 5 Machines
53120 C	Presser Foot	1
91	Clamp Screw For Presser Foot	1
22799 B	Hinge Screw For Presser Foot	1
53105 A	Feed Dog	1
22528	Screw For Feed Dog	1
53124 A	Throat Plate	1
87	Throat Plate Screws	4
53131 C	Stitch Tongue	2
187 B	Screw For Stitch Tongue	1
163 GAS	Needles (Specify Size)	100
53108 C	Looper Assembly	1
53111 A	Loop Retainer Front	2
53111	Loop Retainer Bottom	2
22738 B	Screw For Loop Retainers	4
56	Needle Nut Clamp	2
53139 AD	Feed Roller—Fine Knurl	1
53139 AE	Feed Roller—50 Teeth	1
53139 AH	Feed Roller—Coarse Knurl	1
22894 T	Set Screw For Feed Roller	2
53139 AC	Feed Roller Stripper	2
22561	Screw For Stripper	2
53139 AB	Feed Roller Lifter	1
53139 AG	Plunger Spring	1
21225-5/32	Looper Gauge	1
29484	Screw Assortment	1

*The parts and quantities listed above are intended to assist you in setting up the initial inventory of spare parts. An efficient inventory can only be established according to actual usage. The nature of the sewing operation will determine actual usage.

From the library of: Superior Sewing Machine & Supply LLC

Union Special® Industrial Sewing Equipment

Style 53100 B & C

Suggested Minimum Spare Parts List*

Part Number	Description	Minimum Quantity Per 5 Machines
53130 B	Presser Foot Bottom	1
53130 C	Presser Foot Shank	1
53130 D	Hinge Pin Stud for #53130 C	2
53105 B	Feed Dog	1
22528	Screw for #53105 B	1
53124 B	Throat Plate	1
87	Screw for #53124 B	2
222 D	Screw for #53124 B	2
110 GAS	Needles (specify size)	100
56	Needle Clamp Nut	1
53108 C	Looper Assembly	1
73	Screw for #53108 C	1
52957 C	Cast-off Support	1
22528	Screw for #52957 C	1
21657 E	Washer for #22528	1
52904 G	Cast-off Wire	1
73 A	Screw for #52904 G	1
52958 D	Eyelet	2
73 A	Screw for #52958 D	2
52904 B	Retaining Finger	1
22516	Screw for #52904 B	1
29476 JE	Clutch Assembly	1
53139 S	Clutch Barrel Assembly	1
*53139 AD	Feed Roller, Fine Knurl	1
*53139 AE	Feed Roller, Fifty Teeth	1
*53139 AH	Feed Roller, Coarse Knurl	1
51239 G	Universal Joint	1
660-239	Universal Joint	1
21225-1/8	Looper Gauge	1
29484	Screw Assortment	1

*The parts and quantities listed above are intended to assist you in setting up the initial inventory of spare parts. An efficient inventory can only be established according to actual usage. The nature of the sewing operation will determine actual usage.

Union Special® Industrial Sewing Equipment

Style 53100 E

Suggested Minimum Spare Parts List*

Part Number	Description	Minimum Quantity Per 5 Machines
53120 D	Presser Foot	1
22570 A	Presser Foot Clamp Screw	1
61130 D	Presser Foot Plunger Right	1
61130 E	Presser Foot Plunger Left	1
6990	Spring For Plungers	4
61130	Equalizer	2
22799 N	Screw For Equalizer	2
22799 U	Hinge Screw	2
52805 D-16	Main Feed Dog	1
22593	Screw For Main Feed	2
52853	Main Feed Dog Holder	1
3026 A	Differential Feed Dog	1
90	Differential Feed Dog Screw	1
53124 C	Throat Plate	1
87	Throat Plate Screw	4
53131 C	Stitch Tongue	2
187 B	Screw For Stitch Tongue	2
163 GAS	Needles (specify size)	100
56	Needle Clamp Nut	2
53108 C	Looper Assembly	1
53108 B	Looper	1
53111 A	Loop Retainer-Front	2
53111	Loop Retainer-Bottom	2
22738 B	Loop Retainer Screw	4
73	Looper Set Screw	2
53139 AD	Feed Roller—Fine Knurl	1
53139 AE	Feed Roller—50 Teeth	1
53139 AH	Feed Roller—Coarse Knurl	1
22894 T	Set Screw For Feed Roller	2
53139 AC	Feed Roller Stripper	2
22561	Screw For Stripper	2
53139 AB	Feed Roller Lifter	1
53139 AG	Plunger Spring	1
21225-5/32	Looper Gauge	1
29484	Screw Assortment	1

*The parts and quantities listed above are intended to assist you in setting up the initial inventory of spare parts. An efficient inventory can only be established according to actual usage. The nature of the sewing operation will determine actual usage.

From the library of: Superior Sewing Machine & Supply LLC

DEPENDABLE SERVICE
WORLD'S FINEST QUALITY
SINCE 1881

Union Special®
INDUSTRIAL SEWING MACHINES

UNION SPECIAL maintains sales and service facilities throughout the world. These offices will aid you in the selection of the right sewing equipment for your particular operation. Union Special representatives and service men are factory trained and are able to serve your needs promptly and efficiently. Whatever your location, there is a Union Special Representative to serve you. Check with him today.

ATLANTA, GA.	MONTREAL, CANADA
BOSTON, MASS.	TORONTO, CANADA
CHICAGO, ILL.	BRUSSELS, BELGIUM
DALLAS, TEXAS	LEICESTER, ENGLAND
LOS ANGELES, CAL.	LONDON, ENGLAND
NEW YORK, N. Y.	PARIS, FRANCE
PHILADELPHIA, PA.	STUTTGART, GERMANY

Representatives and distributors in all important industrial cities throughout the world.

UNION SPECIAL CORPORATION
400 N. FRANKLIN ST., CHICAGO, ILL. 60610

From the library of: Superior Sewing Machine & Supply LLC